eduresourceza.com

Downloaded from eduresourceza.com

TEACHERS WITHOUT BORDERS PROGRAMME

BROUGHT TO YOU BY

With grateful thanks to our associate partners, The National Department of Basic Education, The Independent Examinations Board, Siyavula Education, Smarticks, Noteshare, Lemonlicious, datacentrix, and most of all, to the schools and teachers from both the public and private education sectors who as founder contributors, have lent content to the Teachers without Borders programme, for the benefit of all South Africa's learners.

In Bill Gates words, at the Mandela Day 'Living Together' address: "Maintaining the quality of this country's higher education system while expanding access to more students will not be easy. But it's critical to South Africa's future" – working together, we can help achieve this."

Contributing schools to date:

Clifton School	Milnerton High	Rustenburg Girls' High	St Peter's
Durban Girls'	Northwood High	St Anne's DC	St Stithians
Fairmont High	Roedean	St John's DSG	Wynberg Boys' High
Herzlia High	Rondebosch Boys'	St Mary's DSG Kloof	Wynberg Secondary

Downloaded from eduresourceza.com

Downloaded from eduresourceza.com

LABORARE EST ORARE

ST JOHN'S D.S.G.

PIETERMARITZBURG

Small school. Big heart.

Mathematics
JUNE 2019
Grade 8

Examiner: Mrs B. Gebers **Time: 2 Hours**

Moderator: Mrs A. Rugbar **Total: 125**

PLEASE READ THE FOLLOWING INSTRUCTIONS CAREFULLY

1. This question paper consists of **2** sections of 13 pages in total. Please check that your question paper is complete and that you have both sections.

   SECTION A
   This section is to be done in the examination booklets provided.

   SECTION B - THIS IS TO DE DONE ON THE QUESTION PAPER.

   Put your name on the question paper and circle your teacher's name.
   You must hand in your question paper with your examination booklet at the end of the examination.

2. Read the questions carefully and answer all the questions.

3. Number your answers exactly as the questions are numbered.

4. Tippex is not allowed.

5. You may use an approved non-programmable non-graphical calculator.

6. Round your answers off to **TWO** decimal digits where necessary, unless otherwise stated.

7. All necessary working must be clearly shown. Answers only, without relevant calculations, may incur penalties.

8. It is in your own interests to write legibly and to present your work neatly.

Downloaded from eduresourceza.com

Downloaded from eduresourceza.com

SECTION A – [80 MARKS]

Question 1

Consider the following numbers and then answer the questions below:

$2\frac{3}{4}$ $\quad -0{,}234\ldots$ $\quad \sqrt{-9}$ $\quad 25$ $\quad \sqrt[3]{-27}$ $\quad \frac{5}{0}$ $\quad 19$

From the list write down:

a) A prime number
b) A square number
c) A negative integer
d) A non-real number

[4]

Question 2

a) Determine the prime factors of 275 and 350 (4)

b) Now determine the highest common factor of 275 and 350 (2)

[6]

Question 3

Calculate the following without the use of a calculator, showing working out where necessary.

a) $(-9) - (-5)$ (2)

b) $\frac{(-4)+(-8)}{2(-3)}$ (3)

c) $\sqrt{25} - \sqrt[3]{-8} + (-2)^2$ (4)

[9]

Downloaded from eduresourceza.com

Downloaded from eduresourceza.com

Question 4

Simplify the following:

a) $c^2 + c^2 + c^2$ (1)

b) $3a - 2a - 5a$ (1)

c) $3p \,.\, p$ (1)

d) $\frac{6b}{3b}$ (1)

e) $3 \times a + 4 \times a \times b - 2 \times a$ (3)

f) $3(x - y) - 2(2x - y) - 3x$ (4)

g) $\frac{14d^2 - 7d}{7d}$ (3)

h) $x^2 . 2x^3 . 5x^4$ (2)

i) $(2a^3 . 3ab^2)(-3a^2b)^2$ (4)

j) $\frac{(5p^3)(p^4q^3)^2}{10pq^3}$ (4)

[24]

Question 5

Consider the expression below and then answer the questions that follow:

$$9 + 3x^2 - 4x^3 - 4x$$

a) Rewrite the expression in descending order. (1)

b) How many terms are there in the expression? (1)

c) What is the coefficient of x^2 ? (1)

d) Determine the value of the expression if x = - 1. (3)

[6]

Downloaded from eduresourceza.com

Downloaded from eduresourceza.com

Question 6

Write algebraic expression for the following:

a) The sum of a and b (1)

b) The product of *a* and *b* (1)

c) Three times the difference between *p* and *q* (2)

d) The sum of 2 numbers, where the second number is double the first number. (3)

[7]

Question 7

If $a = 3,\ b = -2$ and $c = 0,$ Find the value of:

a) $(ab)^2$ (2)

b) $\frac{ab}{c}$ (2)

c) $a - 2b$ (2)

[6]

Question 8

Solve the following for x:

a) $x - 1 = 5$ (1)

b) $\frac{x}{2} = -5$ (2)

c) $4x - 21 = 5 - 9x$ (3)

d) $4(x + 3) = 5(6x - 2) + 3$ (4)

e) $2x^2 = 32$ (3)

[13]

Downloaded from eduresourceza.com

Downloaded from eduresourceza.com

Question 9

Write an expression for the distance from A to B in terms of x and simplify.

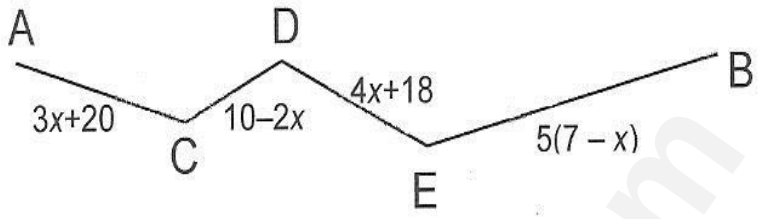

[3]

Question 10

If x is the largest of 3 consecutive natural numbers, what are the other 2 numbers in terms of x?

[2]

Downloaded from eduresourceza.com

Downloaded from eduresourceza.com

SECTION B – 45 Marks

NAME **GRADE 8** ____ GEBERS RUGBAR SCHWEGMANN

Instructions

1. Write your **Name** and **Grade** at the top of the page in the space provided.
2. **Circle** your teacher's name.
3. Answer all the questions on this question paper.
5. Show **all your working** out in the spaces provided.

QUESTION 1

Fill in the missing word in each of following:.

a. 250° is called a(n) _____ angle.

b. The complement of 40° is _____.

c. The supplement of 80° is _____.

d. The size of an angle of an equilateral triangle is _____ degrees.

e. A triangle with three sides of equal lengths is called a(n)

_____ triangle.

f. If an obtuse angle is halved, what type of angle is formed? _____.

g. The angle between the two hands of a clock at 12h 20 is _____ degrees.

h. 90° is also known as a _____ angle.

[8]

Downloaded from eduresourceza.com

Downloaded from eduresourceza.com

QUESTION 2

2.1 Classify each triangle according to their sides.

(a)

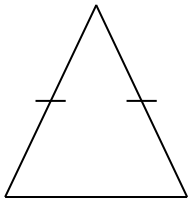

_____

_____

(b)

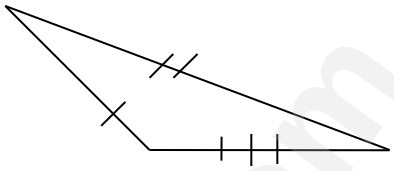

_____

_____

(2)

2.1 Use a ruler and pencil to draw an example of:

(a) an acute angle (b) a reflex angle.

A protractor does not have to be used.

(a) An acute angle (1)	(b) A reflex angle (1) [4]

Downloaded from eduresourceza.com

Downloaded from eduresourceza.com

QUESTION 3

3.1 Give the value of each of the **letters** in the angles of this diagram. No reasons Need be given.

Write your answers in the box below the diagram.

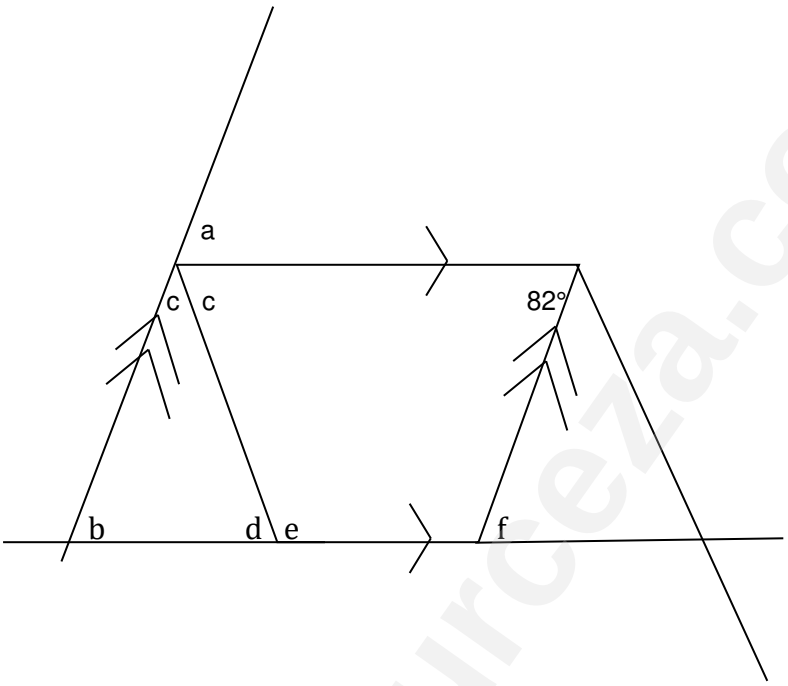

a. _____

b. _____

c. _____

d. _____

e. _____

f. _____

(6)

Downloaded from eduresourceza.com

Downloaded from eduresourceza.com

3.2 Calculate the value of the **letter** in each of the following.

Show all your **working** and give **reasons** for your answers.

a)

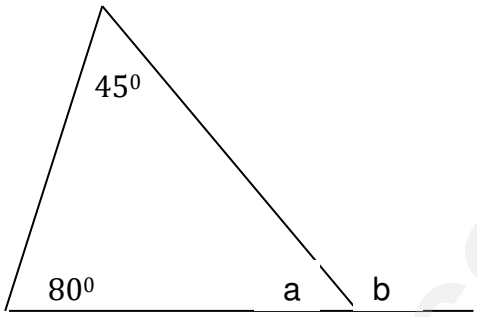

(6)

Downloaded from eduresourceza.com

Downloaded from eduresourceza.com

b)

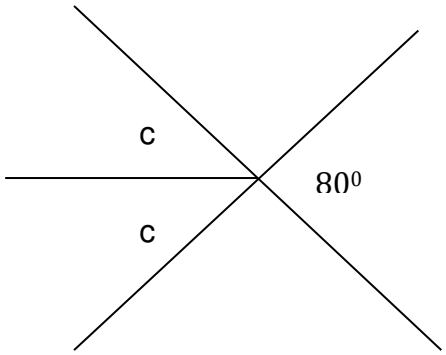

(4)

Downloaded from eduresourceza.com

Downloaded from eduresourceza.com

c)

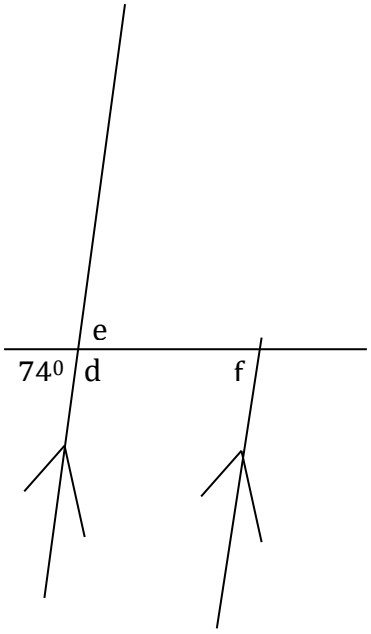

(7)

Downloaded from eduresourceza.com

Downloaded from eduresourceza.com

d)

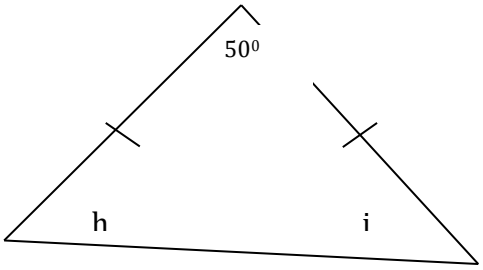

(5)

Downloaded from eduresourceza.com

Downloaded from eduresourceza.com

e.

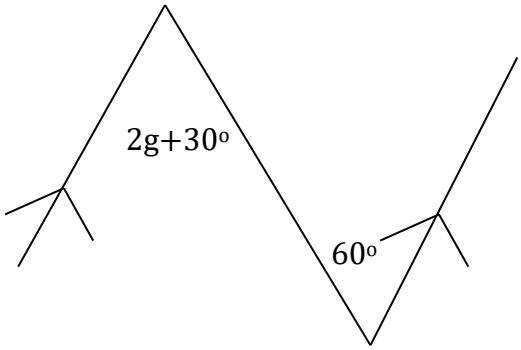

(5)

[33]

Downloaded from eduresourceza.com