eduresourceza.com

Downloaded from eduresourceza.com

Please paste the barcoded label here

TOTAL MARKS

NATIONAL SENIOR CERTIFICATE EXAMINATION
MAY 2022

PHYSICAL SCIENCES: PAPER I

EXAMINATION NUMBER

Time: 3 hours

200 marks

PLEASE READ THE FOLLOWING INSTRUCTIONS CAREFULLY

1. This question paper consists of 30 pages and a Data Sheet of 2 pages (i–ii). Please check that your question paper is complete.
2. Read the questions carefully.
3. Answer ALL the questions on the question paper and hand it in at the end of the examination. Remember to write your examination number in the space provided above.
4. Use the data and formulae whenever necessary.
5. Show your working in all calculations.
6. Units need not be included in the working of calculations, but appropriate units should be shown in the answer.
7. Answers must be expressed in decimal format, not left as proper fractions.
8. Where appropriate, express answers to TWO decimal places.
9. It is in your own interest to write legibly and to present your work neatly.
10. Two blank pages (pages 29 and 30) are included at the end of the paper. If you run out of space for a question, use these pages. Clearly indicate the number of your answer should you use this extra space.

FOR OFFICE USE ONLY: MARKER TO ENTER MARKS

	Q1	Q2	Q3	Q4	Q5	Q6	Q7	Q8	Total
Mark									
Marker's initial									
Moderated mark									
Moderator's initial									
Question total	20	34	37	24	24	25	17	19	200
Re-mark									
Initial									
Code									

Downloaded from eduresourceza.com

IEB Copyright © 2022

Downloaded from eduresourceza.com

QUESTION 1 MULTIPLE CHOICE

Answer the multiple-choice questions on the answer grid below. Make a clear cross (X) in the box corresponding to the letter that you consider to be correct. Every question has only one correct answer.

A	B	~~C~~	D

Here the option C has been marked as an example.

1.1	A	B	C	D
1.2	A	B	C	D
1.3	A	B	C	D
1.4	A	B	C	D
1.5	A	B	C	D
1.6	A	B	C	D
1.7	A	B	C	D
1.8	A	B	C	D
1.9	A	B	C	D
1.10	A	B	C	D

1.1 Which of the following quantities **is NOT** a scalar?

A Momentum
B Speed
C Time
D Power

Downloaded from eduresourceza.com
IEB Copyright © 2022

Downloaded from eduresourceza.com

1.2 A ball is thrown vertically upwards and caught. Which graph best shows the relationship between acceleration and time for the entire motion of the ball? Ignore air friction and take upwards as the positive direction.

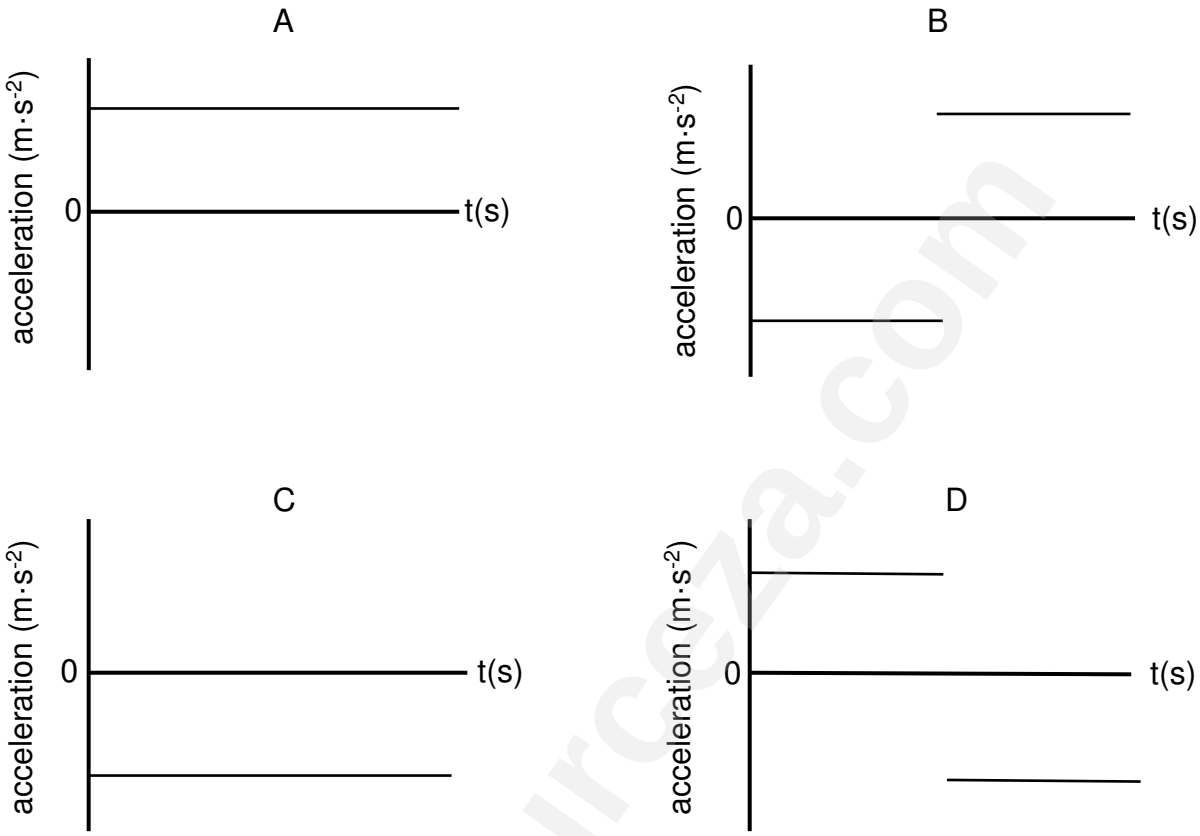

1.3 A block, m, is suspended from the ceiling by two ropes, A and B. Rope A makes an angle of 25° and rope B makes an angle of 50° with the horizontal as shown in the diagram. The tensions in ropes A and B are T_A and T_B respectively.

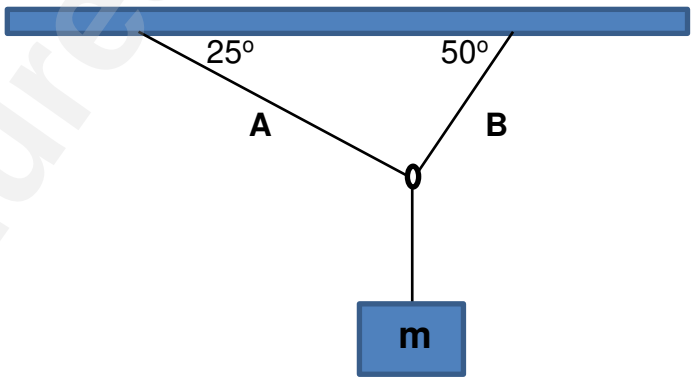

The magnitude of the weight of the block is given by …

A $\sqrt{T_A^2 + T_B^2}$.

B $T_A \cos 25° + T_B \cos 50°$.

C $T_A \sin 25° + T_B \sin 50°$.

D $(T_A + T_B)\sin 105°$.

Downloaded from eduresourceza.com

Downloaded from eduresourceza.com

1.4 A car travels north. The graph below shows how the velocity of the car changes with time. (The graph is not drawn to scale.)

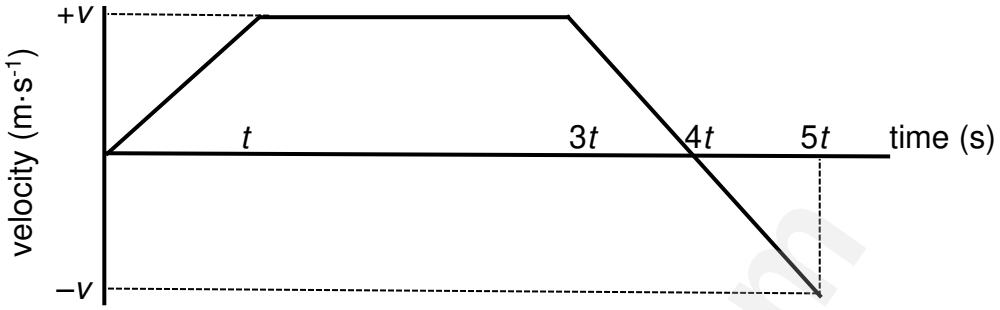

The displacement of the car in 5*t* seconds is …

A $\frac{7}{2}$ *tv* north.

B $\frac{5}{2}$ *tv* north.

C 3 *tv* south.

D 5 *tv* south.

1.5 A ball of mass *m* travelling to the right at velocity *v* strikes a wall and rebounds to the left at velocity 0,25 *v*.

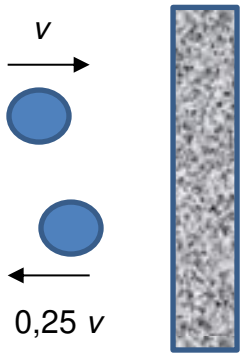

The change in momentum of the ball is …

A 0,75 *mv* left.
B 0,75 *mv* right.
C 1,25 *mv* right.
D 1,25 *mv* left.

1.6 Two point charges, each with charge +*q*, are placed a distance *d* apart. The force experienced by each point charge has a magnitude *F*.

The charges are now **both** doubled and the distance between them is halved. The magnitude of the force experienced by each point charge is …

A 2 *F*.
B 4 *F*.
C 8 *F*.
D 16 *F*.

Downloaded from eduresourceza.com
IEB Copyright © 2022

Downloaded from eduresourceza.com

1.7 The diagram below shows how three resistors, each with resistance *R*, are connected in a certain electric circuit. Which one of the following expressions best represents the total resistance for the three resistors?

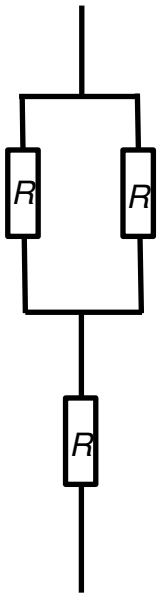

A $\frac{3}{2}R$

B $\frac{2}{3}R$

C $3R$

D $2R$

1.8 In the circuit diagram below, a resistor R and a variable resistor R_x are connected in series with a cell that has negligible internal resistance.

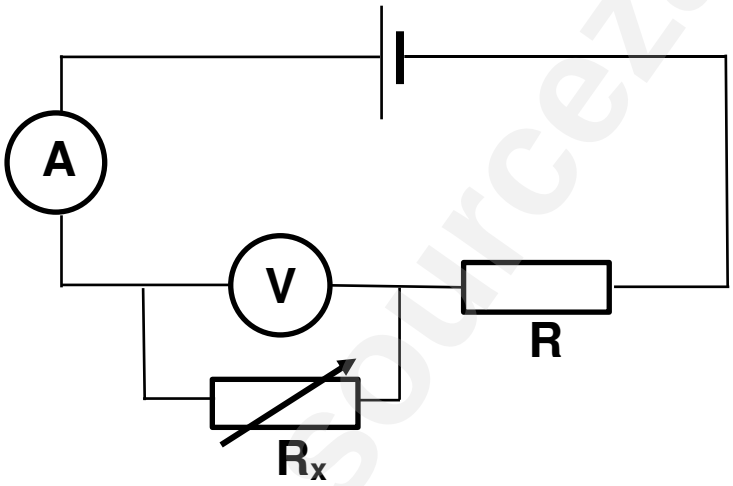

How will the reading on each of the meters change when the resistance of the rheostat (variable resistor) R_x is decreased?

	Reading on ammeter	Reading on voltmeter
A	Increases	Increases
B	Increases	Decreases
C	Decreases	Increases
D	Decreases	Unchanged

Downloaded from eduresourceza.com

Downloaded from eduresourceza.com

1.9 A transformer is shown below where two coils, X and Y, are wound onto a soft iron core.

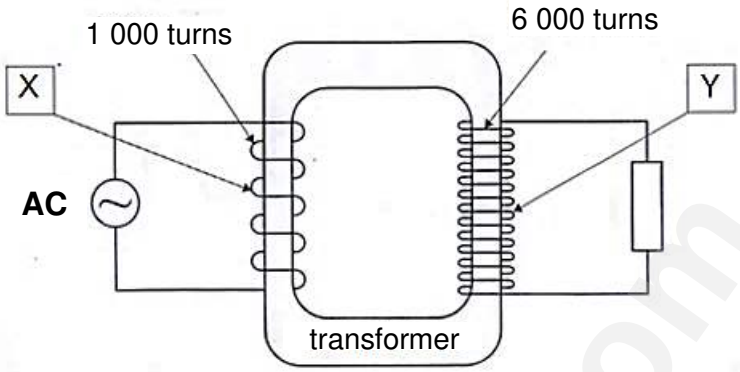

[Source: <www.miniphysics.com>]

The correct labels for X and Y and the type of transformer are:

	X	Y	Type of transformer
A	Primary coil	Secondary coil	Step down
B	Primary coil	Secondary coil	Step up
C	Secondary coil	Primary coil	Step down
D	Secondary coil	Primary coil	Step up

1.10 The sketch below represents a DC motor, where the magnetic field lines from the permanent magnet are shown and the polarity of the power source is given.

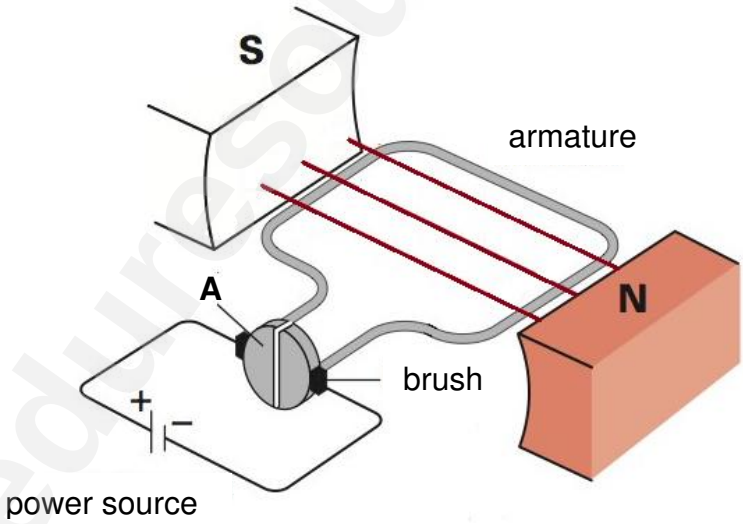

[Reference: <https://electronics.stackexchange.com>]

Choose the correct label for part A and the correct rotation direction of the armature.

	Label – part A	Rotation direction of the armature
A	split ring commutator	clockwise
B	slip ring	clockwise
C	slip ring	anticlockwise
D	split ring commutator	anticlockwise

Downloaded from eduresourceza.com

[20]

IEB Copyright © 2022

Downloaded from eduresourceza.com

QUESTION 2

2.1 A rough ball is projected vertically upwards at an initial velocity of 20 $m \cdot s^{-1}$ and it experiences significant air resistance. The acceleration of the rough ball is 12 $m \cdot s^{-2}$ down.

2.1.1 Define *acceleration.*

(2)

2.1.2 Draw a labelled free body diagram for the rough ball immediately after it was projected.

(2)

One second **after** the rough ball was projected, a smooth dart is projected vertically upwards, also at an initial velocity of 20 $m \cdot s^{-1}$. The dart experiences negligible air resistance. On the way up, the dart and the rough ball pass the point **X** at height ***h***, at the same instant in time. Let the time taken for the dart to reach point **X** be ***t.***

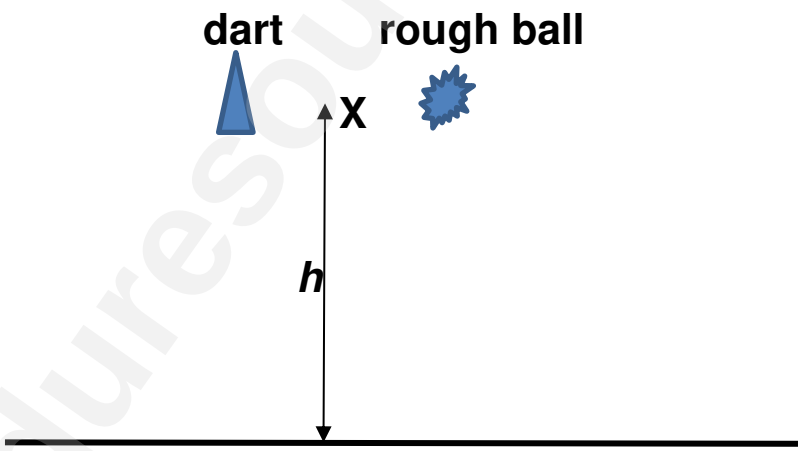

2.1.3 Write expressions for the displacement (***h***) in terms of initial velocity and time for:

(i) The dart

(2)

(ii) The rough ball

(2)

Downloaded from eduresourceza.com

Downloaded from eduresourceza.com

2.1.4 Calculate:

(i) The time ***t*** at which the dart passes **X**

(3)

(ii) The height ***h***

(3)

2.1.5 Calculate the magnitude of the velocity of the dart at **X**.

(4)

Downloaded from eduresourceza.com
IEB Copyright © 2022

Downloaded from eduresourceza.com

2.1.6 On the axes below, draw a graph of velocity against time for the motion of the dart until it reaches its maximum height. Use the information provided and your answer to Question 2.1.5 and **mark these points** on the graph using crosses (X).

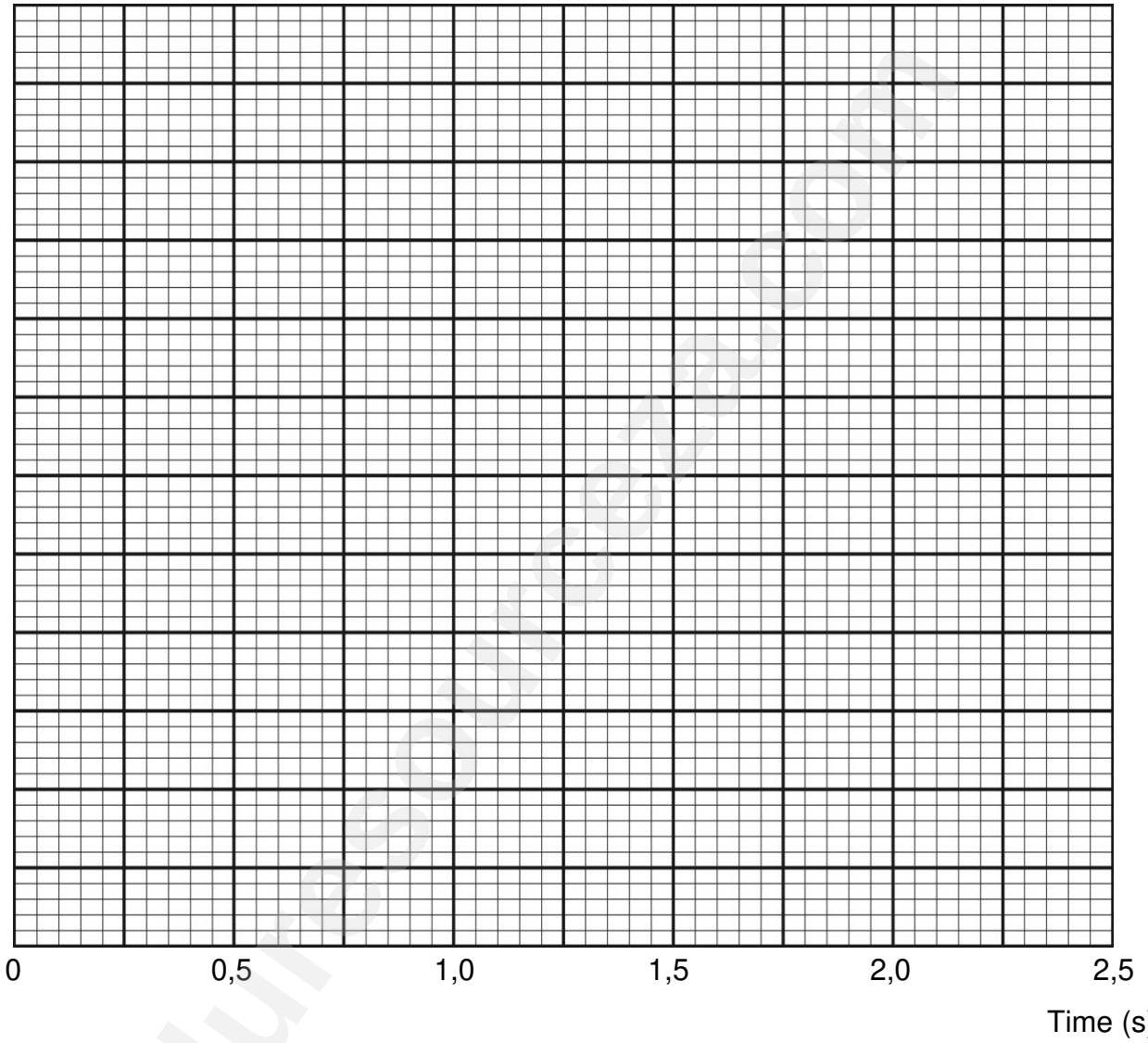

(4)

2.1.7 On your graph, mark the point indicating the time when the dart reaches its maximum height. Mark this point h_{max} and state the time.

(2)

Downloaded from eduresourceza.com

Downloaded from eduresourceza.com

2.1.8 Use your graph to determine the maximum height reached by the dart.

(2)

2.2 A bouncy ball is dropped from the Physics classroom window and lands on a hard flat surface below the window one level down. The window is 14 m above the ground. The ball bounces twice and is then caught by a student standing on the lower level.

2.2.1 Ignoring air resistance, calculate the time taken for the ball to hit the ground for the first time.

(3)

The height of the first bounce is 6,98 m and the ball leaves the ground at 11,71 $m \cdot s^{-1}$. The ball takes 1,20 s to reach the top of its first bounce starting from the instant that it left the ground.

2.2.2 On the axes provided on page 11 and using the ground as the reference point, draw a displacement–time graph for the ball from the time it is dropped to the time it hits the ground for the second time. Take down as positive. Time and displacement values for the following points should be indicated on the axes:

A – the point when the ball was dropped.
B – the point when the ball hit the ground for the first time.
C – the point when the ball reached the top of the first bounce.
D – the point when the ball hit the ground for the second time. (5)

[34]

Downloaded from eduresourceza.com
IEB Copyright © 2022

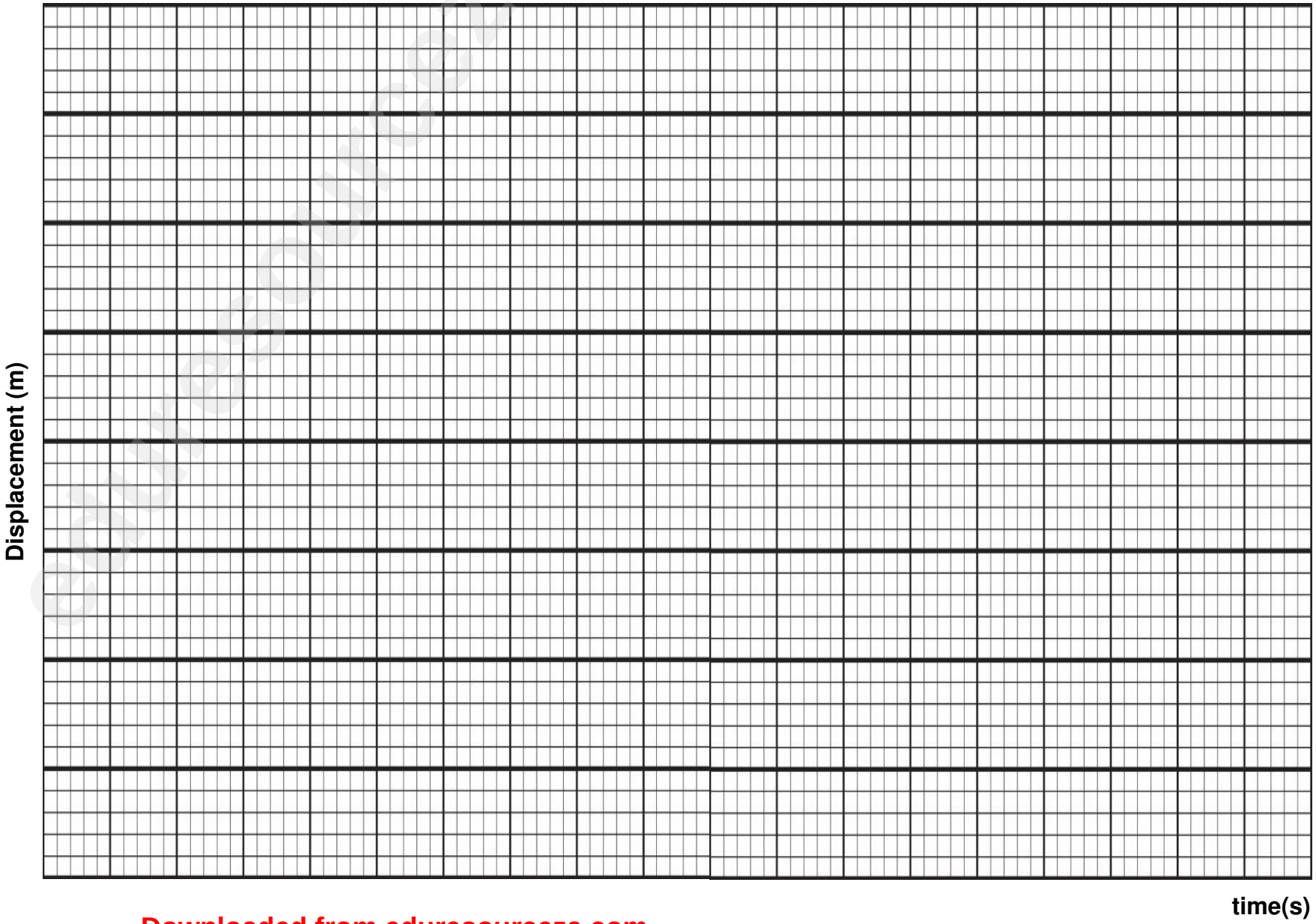

Downloaded from eduresourceza.com

Downloaded from eduresourceza.com

QUESTION 3

3.1 A student performs an experiment where she investigates the maximum force of static friction F_{fs}^{max} for a brick when different mass pieces are placed on top of it. The student drags the brick of mass 1,3 kg along a rough horizontal surface by attaching it to a spring balance as shown in the diagram.

The spring balance is pulled horizontally to the right with a force ***F***. The brick experiences a normal force F_N.

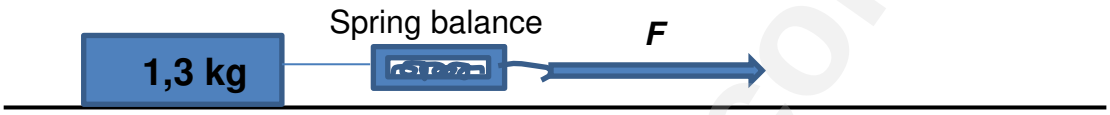

The results of the experiment are shown below.

Mass of brick + mass pieces (kg)	F_{fs}^{max} (N)	F_N (N)
1,30	1,30	12,50
2,00	2,15	20,00
2,30	2,45	22,55
2,53	2,82	24,80

3.1.1 Define the *normal force.*

(2)

Downloaded from eduresourceza.com

Downloaded from eduresourceza.com

3.1.2 Plot a graph showing the relationship between F_{fs}^{max} and F_N for the brick on the rough surface.

(7)

Downloaded from eduresourceza.com

Downloaded from eduresourceza.com

3.1.3 Use the graph to determine the coefficient of static friction for the brick on the rough surface.

(4)

The same rough surface is now tilted to make an angle θ with the horizontal. The spring balance and applied force F are removed. The angle θ is increased gradually until the brick begins to slide.

3.1.4 Draw a labelled free body diagram for the brick on the slope just before it starts sliding.

(3)

3.1.5 Write an expression in terms of θ for the normal force acting on the brick.

(2)

3.1.6 Write an expression in terms of θ for the maximum static friction force (F_{fs}^{max}) acting on the brick before it begins to slide.

(2)

Downloaded from eduresourceza.com
IEB Copyright © 2022

Downloaded from eduresourceza.com

3.1.7 The 1,3 kg block is now placed onto a different rough surface with a coefficient of static friction of 0,48, inclined at an angle θ to the horizontal. The angle θ is now increased gradually, until the block starts to slide. Calculate the angle θ when the block is just about to slide down the slope.

(Hint : $\frac{\sin\theta}{\cos\theta} = \tan\theta$.)

(4)

3.2 A student places two bricks of mass 3 kg and 6 kg on a desk. The bricks are in contact with each other and the student pushes on the 3 kg brick with a force labelled ***X*** that acts at an angle of 25° to the horizontal, as shown in the sketch. While moving, each brick experiences a kinetic friction force of 2 N.

The system accelerates at 1,5 m·s^{-2} to the left.

3.2.1 Write an expression for the horizontal component of ***X***.

(2)

3.2.2 Define the term *net force.*

(2)

3.2.3 Write an expression for the net force acting on the 3 kg brick.

(2)

3.2.4 Write an expression for the net force acting on the 6 kg brick.

(2)

3.2.5 Hence, calculate the magnitude of the force ***X*** that causes the acceleration of the system.

(5)
[37]

Downloaded from eduresourceza.com

Downloaded from eduresourceza.com

QUESTION 4

4.1 A child of mass 40 kg slides down a water slide from point A through point B and collides with a soft foam cushion at point C. The segment B through to C is horizontal and at the lowest point of the water slide. The height of the slide is 20 m.

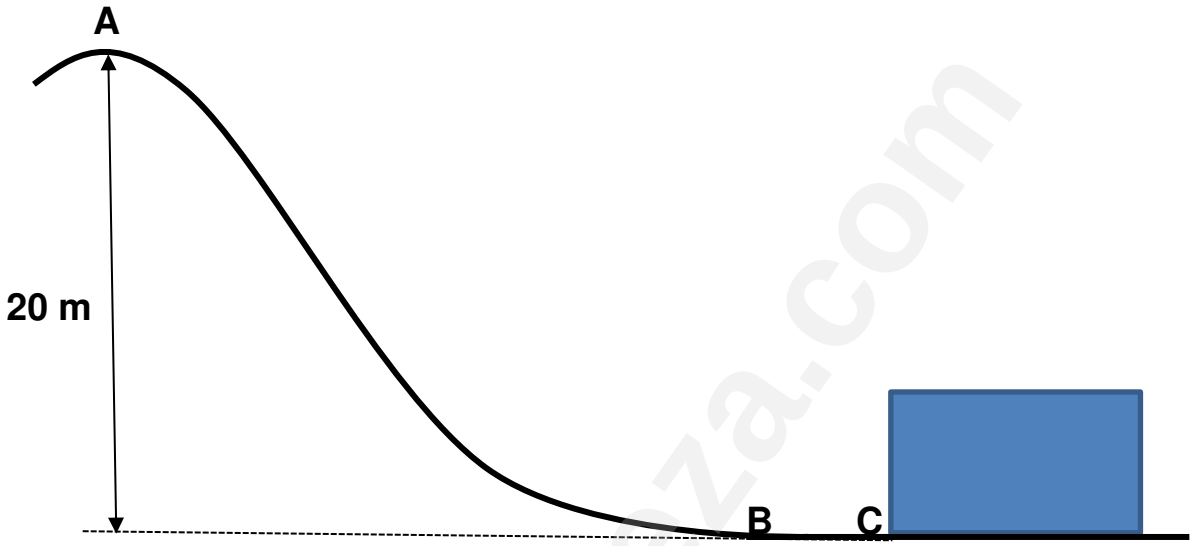

The magnitude of the velocity of the child at A is 0,5 $m \cdot s^{-1}$.

4.1.1 Define *kinetic energy*.

(2)

4.1.2 Calculate the kinetic energy of the child at A.

(3)

4.1.3 Assume that the child experiences friction while sliding between A and B, and that the child's velocity at B is 19,24 $m \cdot s^{-1}$. Calculate the work done by friction as the child slides from A to B.

(5)

Downloaded from eduresourceza.com
IEB Copyright © 2022

Downloaded from eduresourceza.com

Assume that friction can be ignored in the portion of the slide from B to C. The time taken for the child to come to rest , after hitting the surface of the foam, is 1,4 s.

4.1.4 Define the term *impulse*.

(2)

4.1.5 Calculate the force exerted by the foam in bringing the child to rest.

(5)

4.2 A skateboard of mass 5 kg is pushed to the left at 3 $m \cdot s^{-1}$ on a smooth flat surface. Thabo, mass 45 kg, runs to the right at 1,5 $m \cdot s^{-1}$ and jumps onto the skateboard.

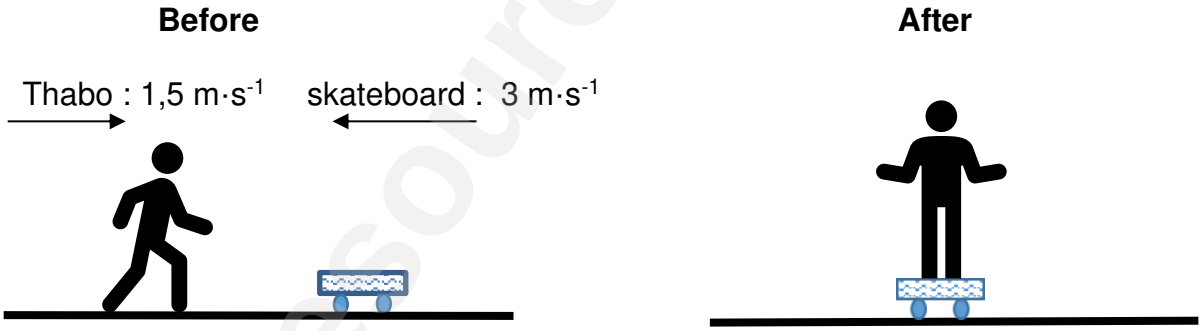

4.2.1 State the law of *conservation of linear momentum*.

(2)

4.2.2 Calculate the velocity of Thabo and the skateboard immediately after he lands on the skateboard.

(5)
[24]

Downloaded from eduresourceza.com

Downloaded from eduresourceza.com

QUESTION 5

5.1 The Earth and the Moon attract each other with a gravitational force. The mass of the Moon is $7{,}16 \times 10^{22}$ kg and the mass of the Earth is $5{,}97 \times 10^{24}$ kg. The distance between the centres of the Earth and the Moon averages $3{,}84 \times 10^{5}$ km.

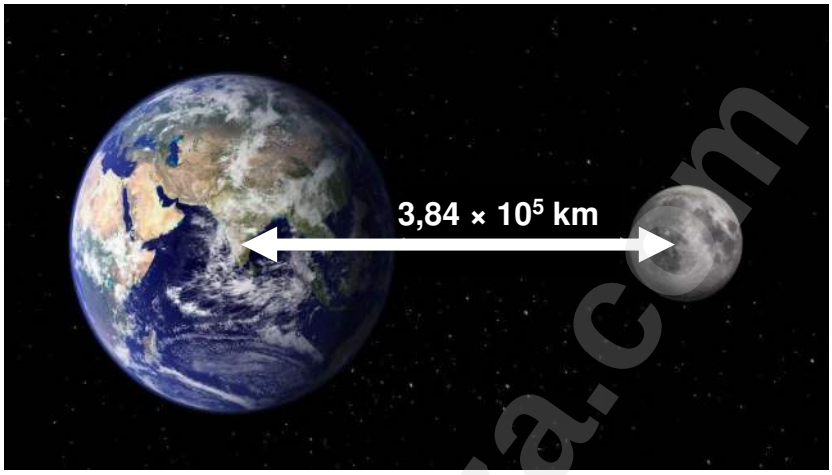

[Picture reference: <https://www.zmescience.com/space>]

5.1.1 Calculate the average gravitational force exerted by the Earth on the Moon.

(4)

The radius of the Earth is $6{,}38 \times 10^{6}$ m.

5.1.2 Calculate the height above the **surface of the Earth** where the gravitational field is $4{,}9\ N \cdot kg^{-1}$.

(5)

Downloaded from eduresourceza.com
IEB Copyright © 2022

Downloaded from eduresourceza.com

5.2 A small charged polystyrene ball of mass 4 g, carrying a charge ***q***, is suspended by a string in a uniform electric field of 3×10^5 N·C^{-1} to the right. The electrostatic force experienced by the ball is 0,07 N to the right. The string experiences a tension ***T*** when the ball is experiencing the electrostatic force.

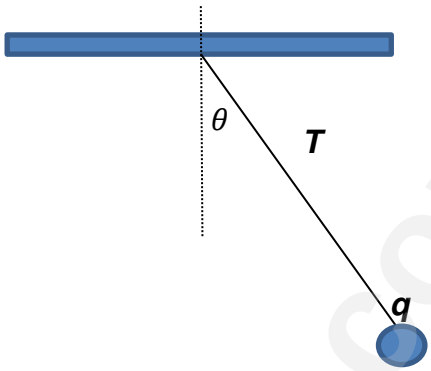

5.2.1 Define the *magnitude of an electric field.*

(2)

5.2.2 Draw the electric field pattern due to the charge ***q***.

(2)

5.2.3 Calculate the magnitude of the charge ***q*** on the polystyrene ball and state whether ***q*** is positive or negative.

(4)

5.2.4 State the magnitude of the resultant (net) force on the polystyrene ball.

(2)

Downloaded from eduresourceza.com

Downloaded from eduresourceza.com

5.2.5 Making use of a vector diagram, calculate:

(i) The magnitude of the tension ***T*** in the string.

(2)

(ii) The angle θ that the string makes with the vertical.

(3)
[24]

Downloaded from eduresourceza.com
IEB Copyright © 2022

Downloaded from eduresourceza.com

QUESTION 6

6.1 Consider the electric circuit shown below:

***emf* = 10 V ; *r* = 5 Ω**

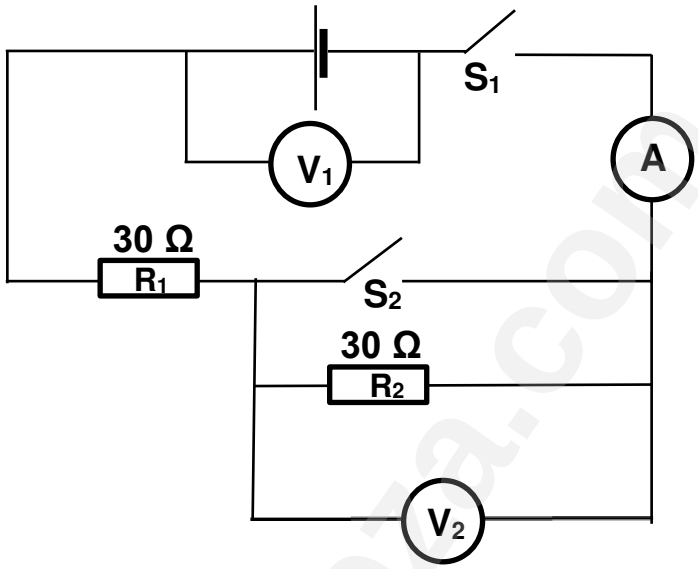

6.1.1 Define the term *emf.*

(2)

6.1.2 When switches S_1 and S_2 are OPEN, state the reading on the voltmeter V_1.

(2)

Switch S_1 is now closed and switch S_2 is left open.

6.1.3 Calculate the current in the circuit.

(4)

6.1.4 Determine the reading on voltmeter V_2.

(2)

Downloaded from eduresourceza.com

Downloaded from eduresourceza.com

Switches S_1 and S_2 are now both closed.

6.1.5 State whether the reading on ammeter A will INCREASE, DECREASE or REMAIN THE SAME.

(1)

6.1.6 Will the reading on V_2 be GREATER THAN, LESS THAN or EQUAL TO your answer to Question 6.1.4?

(1)

6.1.7 Explain your answer to Question 6.1.6.

(3)

6.2 A kettle is marked 220 V : 1 500 W and an iron is marked 220 V : 1 800 W.

6.2.1 Explain in terms of energy what is meant by the information 1 500 W.

(2)

6.2.2 Calculate the total current flowing in the circuit when the kettle and the iron are connected in parallel.

(4)

6.2.3 Which heating element, the kettle or the iron, has the highest electrical resistance? Justify your answer using a Physics formula but **without doing a calculation**. (Assume that the heating elements are always connected in parallel.)

(4)

Downloaded from eduresourceza.com

[25]

IEB Copyright © 2022

Downloaded from eduresourceza.com

QUESTION 7

The microphone is a device that converts sound waves into electrical signals. The diagram below shows a simplified representation of a microphone. Sound waves enter the microphone and cause a flexible diaphragm and coil to vibrate between the poles of a magnet. The coil vibrates horizontally as illustrated with the arrow. Points A and B are two points in the wire that is part of the coil.

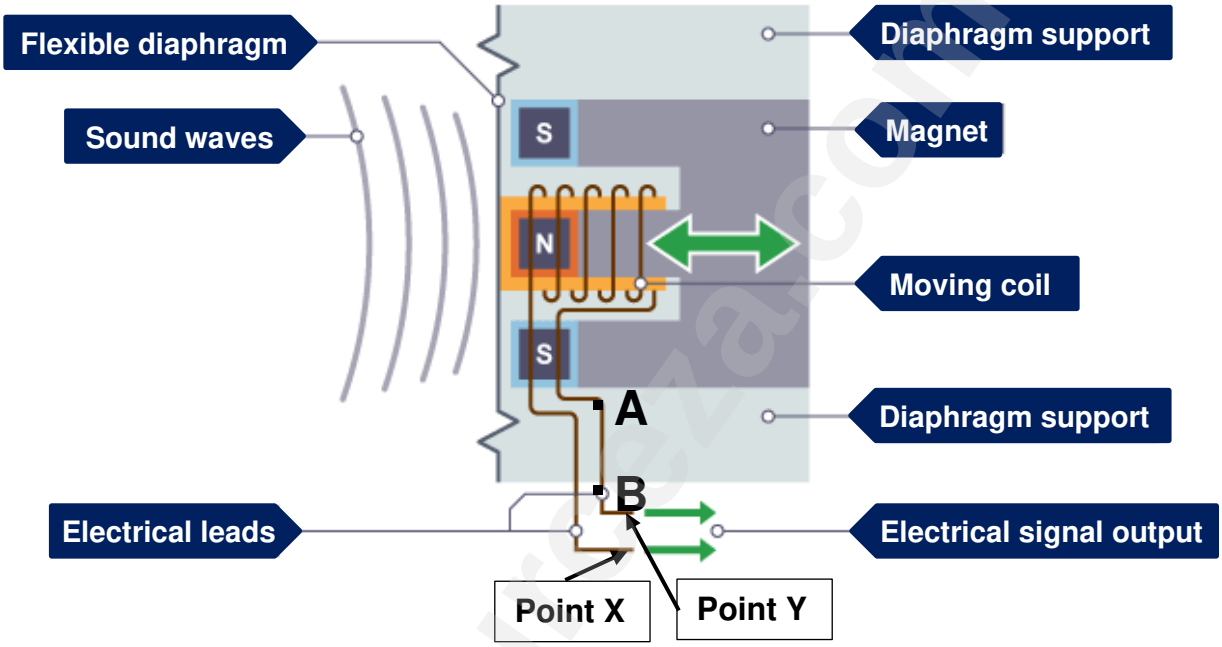

[Reference: <https://www.bbc.co.uk/bitesize/guides>]

7.1 State the energy conversion in a microphone shown above.

(2)

7.2 When the coil moves from right to left, will the conventional current flow from A to B or from B to A?

(2)

7.3 Name the law you used to arrive at your answer in Question 7.2.

(2)

7.4 The coil moves from right to left. Will the induced current create a north or a south pole at the left end of the solenoid?

(2)

Downloaded from eduresourceza.com

Downloaded from eduresourceza.com

A student plots a graph of the current (*I*) at point **X** as a function of time (*t*) as shown below:

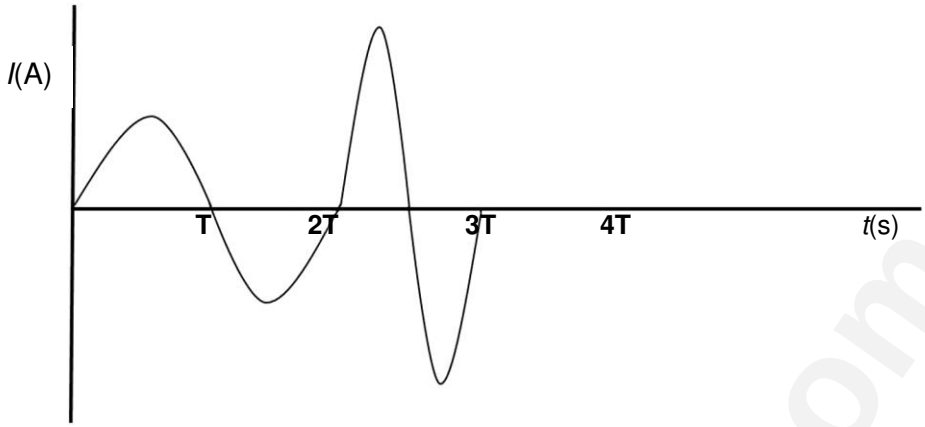

7.5 Describe the change that could have occurred at 2T to increase the magnitude of the current.

(2)

7.6 Explain what is meant by *AC* power supply.

(2)

The student connects a device consisting of four diodes, as shown below, between points **X** and **Y** in the circuit portion of the diagram on the previous page.

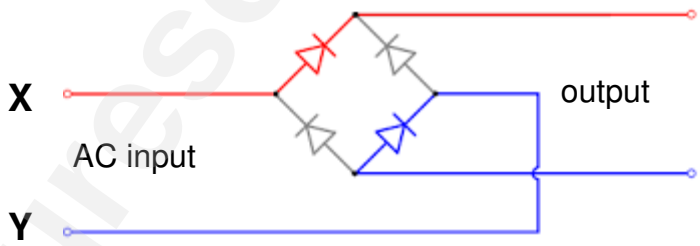

7.7 State the function of a device consisting of four diodes as shown above.

(2)

Downloaded from eduresourceza.com
IEB Copyright © 2022

Downloaded from eduresourceza.com

7.8 The graph showing input current (I) to the device as a function of time, is shown below. Sketch the graph of output current (I) as a function of time, from the device consisting of four diodes as shown on the previous page. Use the axes in the frame below for your sketch.

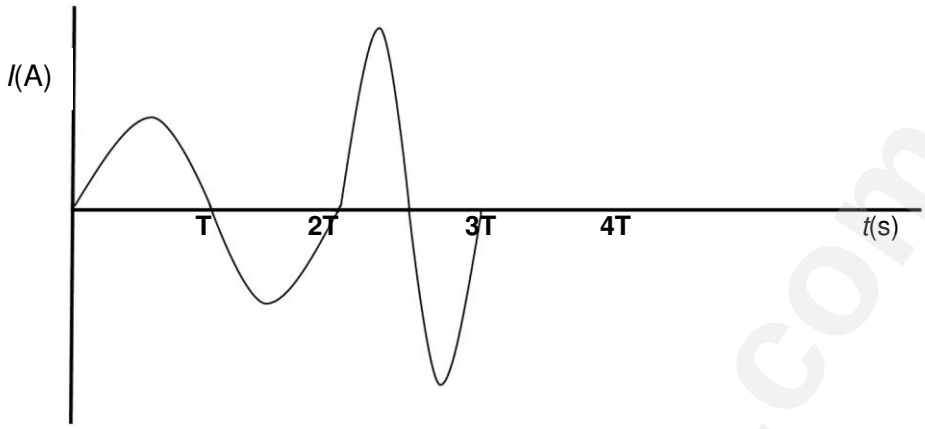

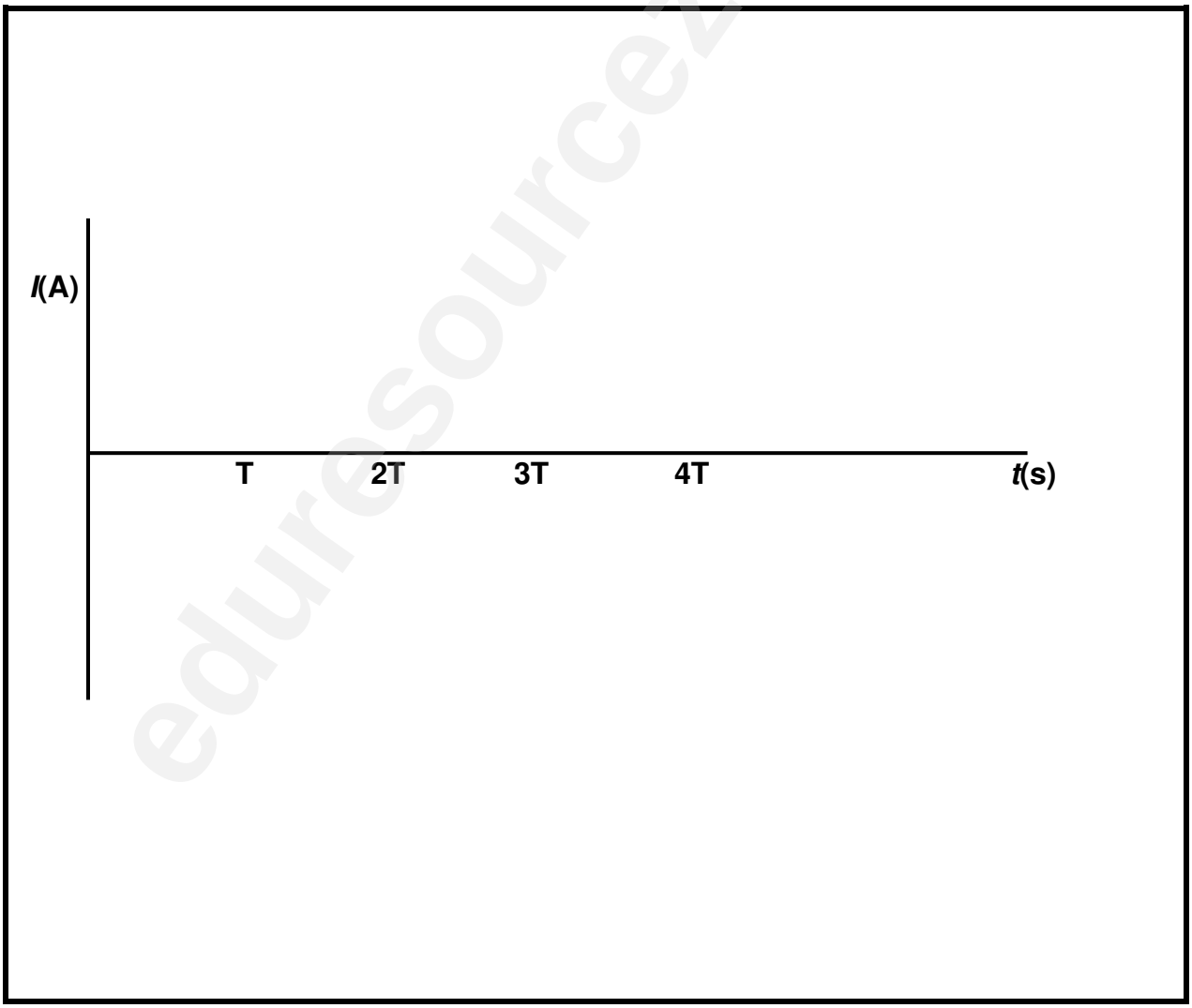

(3)
[17]

Downloaded from eduresourceza.com

Downloaded from eduresourceza.com

QUESTION 8

8.1 The following diagram represents the hydrogen emission spectrum. The wavelengths corresponding to the violet, blue and red spectral lines are shown in the diagram below and are 410 nm, 434 nm and 656 nm respectively.

8.1.1 There is another line in the hydrogen emission spectrum corresponding to a colour. It has a frequency of $7{,}81 \times 10^{14}$ Hz. Calculate the wavelength of this spectral line.

(3)

8.1.2 The diagram above has been reproduced below. Use an arrow to show the approximate position of the spectral line with frequency $7{,}81 \times 10^{14}$ Hz.

(2)

Downloaded from eduresourceza.com
IEB Copyright © 2022

Downloaded from eduresourceza.com

When electrons make transitions from higher to lower energy levels, photons are emitted. The electron transitions are represented by the vertical lines shown in the diagram below.

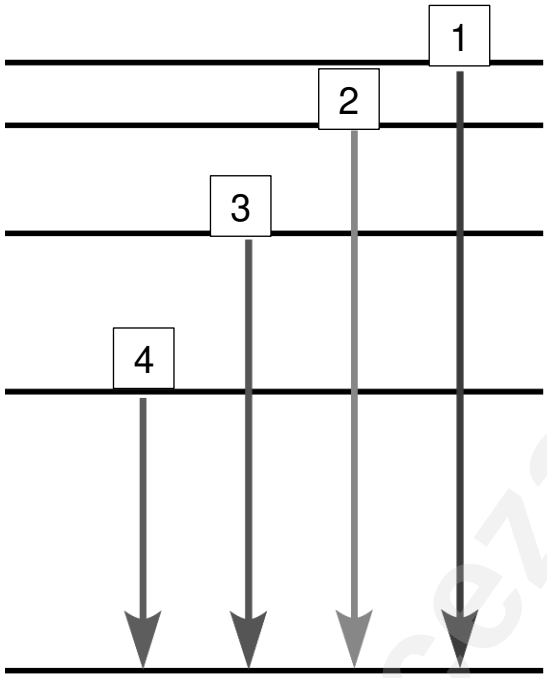

[Diagram reference: <www.khanacademy.org>]

8.1.3 Which electron transition is MOST LIKELY to result in the 410 nm line? Write down the number of only this transition.

(1)

8.1.4 Explain your answer to Question 8.1.3.

(2)

8.2 The photoelectric effect is applied in the operation of certain light-sensitive photovoltaic cells that power calculators and other low-power devices.

8.2.1 Describe what is meant by the *photoelectric effect*.

(2)

Downloaded from eduresourceza.com

Downloaded from eduresourceza.com

The work function of a certain cell where the metal emission surface is made from calcium is 2,81 eV.

8.2.2 Convert 2,81 eV to Joules.

(2)

8.2.3 Calculate the threshold frequency of calcium.

(3)

8.2.4 Calculate the velocity of emitted electrons when UV light of frequency 6×10^{15} Hz is shone onto the calcium surface.

(4)
[19]

Total: 200 marks

Downloaded from eduresourceza.com
IEB Copyright © 2022

Downloaded from eduresourceza.com

ADDITIONAL SPACE (ALL questions)

REMEMBER TO CLEARLY INDICATE AT THE QUESTION THAT YOU USED THE ADDITIONAL SPACE TO ENSURE THAT ALL ANSWERS ARE MARKED.

eduresourceza.com

Downloaded from eduresourceza.com

Downloaded from eduresourceza.com

eduresourceza.com

Downloaded from eduresourceza.com
IEB Copyright © 2022