eduresourceza.com

Downloaded from eduresourceza.com

ELECTROSTATICS

Static electricity is stationary electricity i.e there is no continuous movement of electrical charges.

Electrostatics is the study of static electricity where we try to find out what effect do charges at rest have on one another.

TYPES OF CHARGES:

1. **Positive charge** – A positive charge on an object originates with the removal or shortage of electrons
2. **Negative charge** – A negative charge on an object originates with the addition or surplus of electrons.

N.B . **Neutral object** - when the number of electrons (negative charges) is equal to the number of protons (positive charges).

Charged objects exert forces on each other:

- Like charges repel each other – **Repulsion**
- Unlike charg

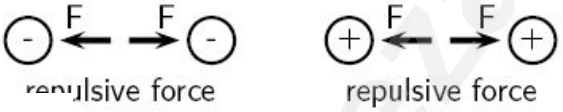

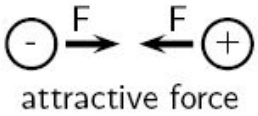

Objects can be charged by

- **Friction:**
  - A plastic ruler becomes positively charged when it is rubbed with a dry cloth because the plastic ruler transfers electrons to the cloth
  - A glass rod becomes negatively charged when rubbed with a dry cloth because the dry cloth transfers electrons to the glass rod.
- **Touch:**
  - When a charged object touches an uncharged object, then both objects obtain the same charge if they are identical.

The law of conservation of charge

The algebraic sum of the charges remains constant in a closed system.

Unit of charge

- Charge is measured in units called coulombs (C).
- A coulomb of charge is a very large charge.
- In electrostatics we therefore often work with charge in micro coulombs

(1 μC = 1 × 10^{-6} C) and nano coulombs (1 nC = 1 × 10^{-9} C).

Coulomb's law

The force of attraction or repulsion that two charges at rest exert on each other is directly proportional to the product of the two charges and inversely proportional to the square of the distance between their centres.

Downloaded from eduresourceza.com

Downloaded from eduresourceza.com

$$F_{net} = \frac{KQ_1Q_2}{r^2}$$

F is the force in Newtons (N)

Q_1 and Q_2 are charges in coulombs (C)

r is the distance between the two charges in metres (m)

k is proportionality constant (Coulombs Law constant) with the value of $9x10^9 N{\cdot}m^2.C^{-2}$

Worked Example 1

Two point-like charges carrying charges of +3 nC and −5 nC are 2m apart. Determine the magnitude of the force between them and state whether it is attractive or repulsive.

Solution 1

Step 1: Data

F =

Q_1 = +3 nC = $+3 \times 10^{-9}$C

Q_2 = -5 nC = -5×10^{-9}C

r = 2 m

k = $9x10^9 N{\cdot}m^2.C^{-2}$

Step 2: Suitable Equation

$$F = \frac{kQ_1Q_2}{r^2}$$

Step 3: Determine the magnitude of the force

$$F = \frac{kQ_1Q_2}{r^2}$$

$$= \frac{(9,0 \times 10^9)(3 \times 10^{-9})(5 \times 10^{-9})}{(2)^2}$$

$$= 3,38 \times 10^{-8} N$$

Thus the magnitude of the force is $3,38 \times 10^{-8}$N. However since both point charges have opposite signs, the force will be attractive.

Worked example 2

Two tiny spheres A and B with charges – 4 nC and +4 nC respectively, are placed as in the sketch. They are fixed while a third charge C of + 4 nC has its centre placed at at a

Downloaded from eduresourceza.com

Downloaded from eduresourceza.com

distance of 40 mm from the centres of both A and B. 1 nC = 1 nano coulomb = 1 x 10^{-9} C.

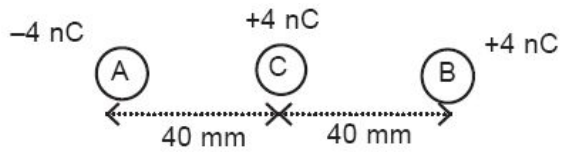

(a) Calculate the magnitude of the Coulombic force that exists between charge A of – 4 nC and the charge C of +4 nC charge.
(b) In which direction will the sphere C move?
(c) Calculate the magnitude of the acceleration with which the sphere C will **start** moving from its position as indicated, if it has a mass of 200 g.

Solution 2
Draw a free body diagram showing the forces on C. For C, take as positive the direction to the left.
Let C react with A first, and then with B

$$F_{AC} = \frac{kQ_1Q_2}{r^2} = \frac{9*10^9x4*10^{-9}x4*10^{-9}}{(40*10^{-3})} = 9*10^{-5}N \text{ to the left } (Attractive)$$

(b) F_{AB} = 9x10^{-5}N to the left (Repulsive)
(c) $a = \frac{F_{res}}{m} = \frac{18x10^{-5}}{200x10^{-3}} = 9x10^{-4}\ m.s^{-2}$

ELECTRIC FIELD AROUND CHARGES
Electric field
An electric field is a region around a charge where any other charge experiences a force. The direction of the electric field at a point is the direction that a positive test charge would move if placed at that point.

Some important points to remember about electric fields:
- They originate and end perpendicularly to the surface of the charged objects.
- Field lines never cross.
- They are most dense (closer to each other) where the field is the strongest and is least dense (further from each other) where the field is the weakest.
- They surround the charged object in three dimensions. We only draw a few lines in one plane
- There is a uniform field (except at the end points) between two oppositely charged parallel plates.

Downloaded from eduresourceza.com

Downloaded from eduresourceza.com

Electric field lines around a positive point charge:

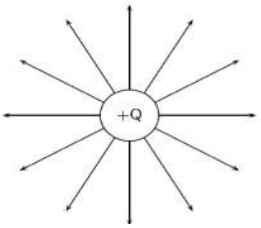

Electric field lines around a negative point charge:

- For a negative charge, field lines are drawn towards the charge.

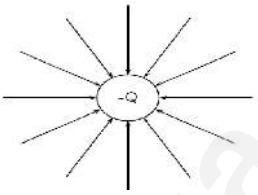

Electric field lines of two equal but opposite charges:

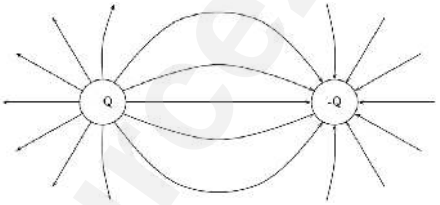

Electric field lines of two equal positive charges:

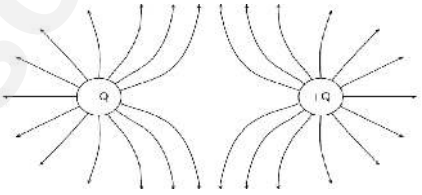

Electric field lines of two equal negative charges:

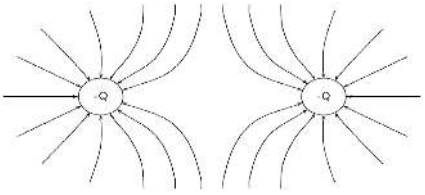

Electric fields lines between two oppositely charged parallel plates:

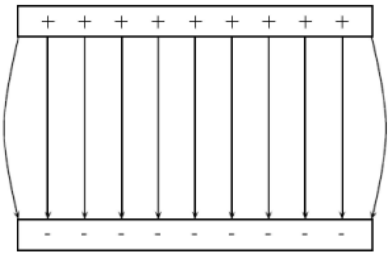

Downloaded from eduresourceza.com

Downloaded from eduresourceza.com

Strength of an electric field

the force experienced will depend on the distance of the test charge(q) away from the charge(Q) setting the field.

The magnitude of the electric field (electric field strength) at a point in an electric field is the force per positive unit charge (thus + 1C) at that point.

$$Electric\ field\ strength = \frac{force}{charge}$$

Or in symbols, $E = \frac{F}{q}$

Unit: if the electrostatic force **F** acts on the charge in Newton (N), the charge q is in coulomb (C), then the electric field strength (E) is in $N \cdot C^{-1}$ (Newton per Coulomb). As we will see later, the electric field strength can also be measured in Volt per metre ($V \cdot m^{-1}$).
Direction: electric field strength is a vector quantity because it has magnitude and direction. A direction of electric field strength E at a specific point in an electric field is the same as the direction of the electrostatic force that a positively charged particle will experience at that point. The positively charged particle will thus move in the direction of the field and a negatively charged particle will move against the field.

The force experienced by a test charge when placed in an electric field is given by;

$$F = qE$$

Worked example 3
If the magnitude of the electric field strength (**intensity**) is $3 \times 10^{6}\ N \bullet C^{-1}$ at a point, calculate the magnitude of the force acting on a charge of – 7 nC placed at that point.

$$F = qE$$

$$= 7 \times 10^{-9} \times 3 \times 10^{6}$$

$$= 0.021\ N$$

Electric field strength at a point due to a number of point charges

The force betweer charges is given by:

$F = \frac{kQq}{r^2}$ (If one charge Q and the other q.)

Therefore, the ele be written as

$E = \frac{kQ}{r^2}$ (v charge setting the field)

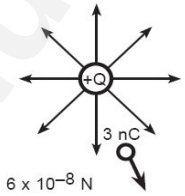

N. B. As with Coulomb's law calculations, do not substitute the sign of the charge into the equation for electric field. Instead, choose a positive direction, and then either add or subtract the contribution to the electric field due to each charge depending upon whether it points in the positive or negative direction, respectively.

Worked Example 4
Question: Calculate the electric field strength 30cm from a 5nC charge.

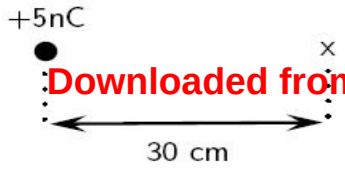

Downloaded from eduresourceza.com

Downloaded from eduresourceza.com

Solution 4
Step 1: Data.

Q = +5nc = $+5 \times 10^{-9}$ C
r = 30 cm = 0.30 m
k = $9x10^9 N \cdot m^2 \bullet C^{-2}$

Step 2: **Select a suitable equation**

$$E = \frac{kQ}{r^2}$$

Step 3: substitute into equation:

$$E = \frac{kQ}{r^2}$$

$$= \frac{(9 \times 10^{-9})\ (5 \times 10^{-9}}{(0,\ 3)^2}$$

$$= 5 \times 10^{-16}\ N \cdot C^{-1}$$

Worked example 5
R and S are two points in the electric field of a small negatively charged sphere Q, Two charges of Q_1 = +3nC and Q_2 = −4nC are separated by a distance of 40cm. What is the electric field strength at a point that is10cm from Q_1 and 30cm from Q_2? The point lies between Q_1 and Q_2.

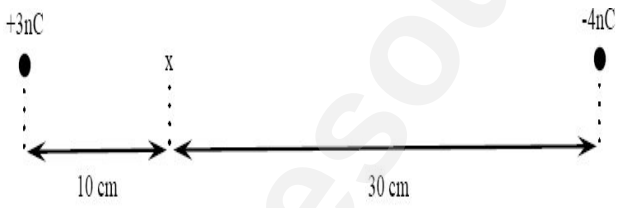

Solution 5
Step 1: **Determine what is required:**
We need to calculate the electric field a distance from two given charges.

Step 2: **Determine what is given:**
We are given the magnitude of the charges and the distances from the charges.

Step 3: Determine how to approach the problem:
We will use the equation:

$$E = \frac{kQ}{r^2}$$

We need to work out the electric field for each charge separately and then add them to get the resultant field.

Step 4: **Substitute into an equation:**
We first calculate E at x due to **Q_1:**

Downloaded from eduresourceza.com

Downloaded from eduresourceza.com

$$E = \frac{kQ}{r^2}$$

$$= \frac{(9 \times 10^9)(3 \times 10^{-9})}{(0,1)^2}$$

$$= 2,70 \times 10^3 \text{ N·C}^{-1}$$

Then for **Q_2:**

$$E = \frac{kQ}{r^2}$$

$$= \frac{(9 \times 10^9)(4 \times 10^{-9})}{(0.3)^2}$$

$$= 4,00 \times 10^2 \text{ N·C}^{-1}$$

We need to add the two electric fields because both are in the same direction.
The field is away from Q_1 and towards Q_2.
Therefore,

$$E_{total} = 2,70 \times 10^3 + 4,00 \times 10^2 = 3,10 \times 10^3 \text{N·C}^{-1}$$

Electrical potential energy and Electric potential
The electrical potential energy of a charge is the energy it has because of its position relative to other charges that it interacts with. The potential energy of a charge Q_1 relative to a charge Q_2 a distance r away is calculated by:

Worked example 6
What is the electric potential energy of a 7nC charge that is 2 cm from a 20nC?

$$U = \frac{kQ_1Q_2}{r}$$

Solution 6
Step 1: Data.

Q_1 = 7nC = 7×10^{-9} C
Q_2 = 2OnC = 20×10^{-9} C
r = 2cm = 2×10^{-2} m

Step 2: **Suitable equation:**

$$U = \frac{kQ_1Q_2}{r}$$

Step 3: Substitute into an equation

$$= \frac{9 \times 10^9 (7 \times 10^{-9}) \cdot (20 \times 10}{2 \times 10^{-2}}$$

$$= 6,30 \times 10^{-5} \text{ J}$$

Electric potential
The electric potential at a point is the electrical potential energy per unit charge, i.e. the potential energy a +1C test charge would have if it were placed at that point.
Consider a positive test charge +q that is free to move, placed at A in the electric field of another positive point charge.

Downloaded from eduresourceza.com

Downloaded from eduresourceza.com

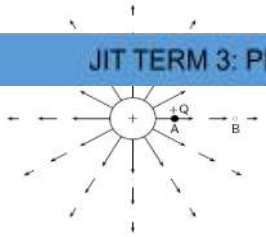

The test charge moves towards B under the influence of the electric field of the other charge.
In the process the test charge loses electrical potential energy and gains kinetic energy. Thus, at A, the test charge has more potential energy than at B – A is said to have a higher electrical potential than B. to move the charge from B back to A EXTERNAL WORK MUST BE DONE.

POTENTIAL DIFFERENCE

- The potential difference between two points in an electric field is defined as the work required to move a unit positive test charge from the point of lower potential to that of higher potential.

OR

- The electrical potential difference is the difference in electrical potential energy per unit charge between two points ($V = \frac{W}{Q}$).

Unit: The electrical potential difference is measured in volts (**V**). Using the equation $V = \frac{W}{Q}$ the unit will be joule per coulomb ($J \cdot C^{-1}$) which is the same as volt, thus electrical potential difference is also called voltage.

Worked example 7:
What is the potential difference between two points in an electric field if it takes 600J of energy to move a charge of 2C between these two points?

Solution 7
Step 1: **Data**.

Step 2: Suitable equation:

$$V = \frac{W}{Q}$$

Step 3: Substitution:

$$V = \frac{W}{Q}$$

$$= \frac{600}{2}$$

$$= 300V$$

Downloaded from eduresourceza.com

Downloaded from eduresourceza.com

QUESTION 1 GP 2015

placed in fixed positions along the same straight line as shown in the diagram below. Spheres **A** and **B** are placed 30 cm from each other. Point **P** is positioned 30 cm to the right of sphere **B** on the same straight line.

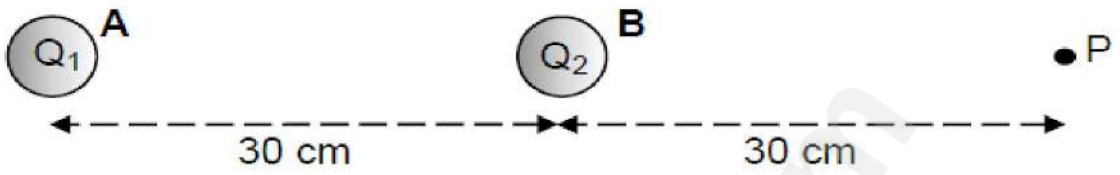

The charge on sphere **B** is positive. The net electric field $\mathbf{E_{net}}$ at point **P** as a result of the two charges $\mathbf{Q_1}$ and $\mathbf{Q_2}$ is towards the right as shown in the diagram below.

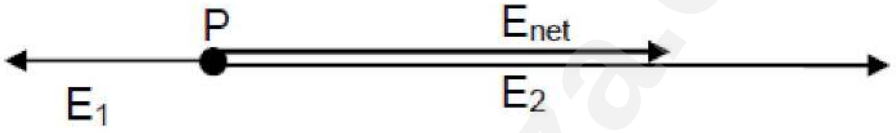

1.1 What is the sign of the charge on sphere **A**? Give a reason for the answer. (3)

1.2 The net electric field at point P is 1 600 $N \cdot C^{-1}$ to the right and the charge on sphere B has a magnitude of +12 nC. (7)
Calculate the magnitude of the charge on sphere A.

A proton is placed at point **P** without changing the charges and positions of spheres **A** and **B**.

1.3 Calculate the net electrostatic force experienced by the proton. (4)

[15]

QUESTION 2 DBE JUNE 2015

Two identical neutral spheres, **M** and **N**, are placed on insulating stands. They are brought into contact and a charged rod is brought near sphere **M**.

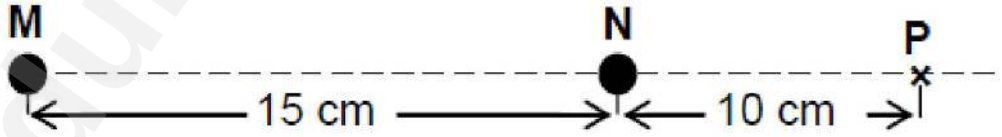

When the spheres are separated it is found that 5×10^6 electrons were transferred from sphere **M** to sphere **N**.

2.1 What is the net charge on sphere **N** after separation? (3)

2.2 Write down the net charge on sphere M after separation. (2)

The charged spheres, **M** and **N**, are now arranged along a straight line, in space, such that the distance between their centres is 15 cm. A point **P** lies 10 cm to the *right* of **N** as shown in the diagram below.

2.3 Define the *electric field* at a point.

(2)

Downloaded from eduresourceza.com

Downloaded from eduresourceza.com

[15]

QUESTION 3 DOE FEB/MAR 2016

A sphere Q_1, with a charge of -2,5 µC, is placed 1 m away from a second sphere $\mathbf{Q_2}$, with a charge +6 µC. The spheres lie along a straight line, as shown in the diagram below. Point **P** is located a distance of 0,3 m to the left of sphere $\mathbf{Q_1}$, while point **X** is located between $\mathbf{Q_1}$ and Q_2. The diagram is not drawn to scale.

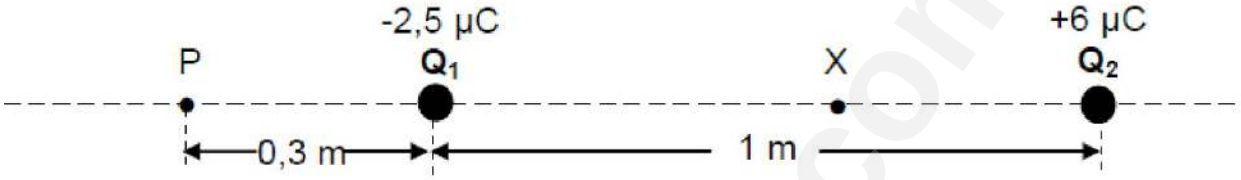

3.1 Show, with the aid of a VECTOR DIAGRAM, why the net electric field at point **X** *cannot be zero.* (4)

3.2 Calculate the net electric field at point **P**, due to the two charged spheres $\mathbf{Q_1}$ and Q_2. (6)

[10]

QUESTION 4: DOE NOVEMBER 2009

Two metal spheres on insulated stands carry charges of +4 uC and -6 uC respectively. The spheres are arranged with their centres 40 cm apart, as shown below.

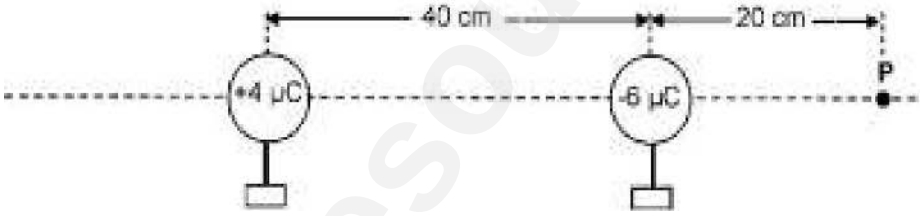

4.1 Calculate the magnitude of the force exerted by each sphere on the other. (4)

4.2 By what factor will the magnitude of the force in QUESTION 4.1 change if the distance between the spheres is halved? (Do not calculate the new value of the force.) (1)

4.3 Calculate the net electric field at point P as shown in the diagram above. (6)

4.4 The spheres are now brought into contact with each other and then returned to their original positions. Now calculate the potential energy of the system of two charges. (5)

[16]

CURRENT ELECTRICITY

CHARGE

The unit of charge is the Coulomb and is the quantity of charge on 6,25 x 10^{18} electrons.

Electrical charges may be positive or negative. A positive charge is caused by a deficiency of electrons while a negative charge is caused by an excess of electrons.

Downloaded from eduresourceza.com

Downloaded from eduresourceza.com

eduresourceza.com

Downloaded from eduresourceza.com

Downloaded from eduresourceza.com

ELECTRICAL SYMBOLS

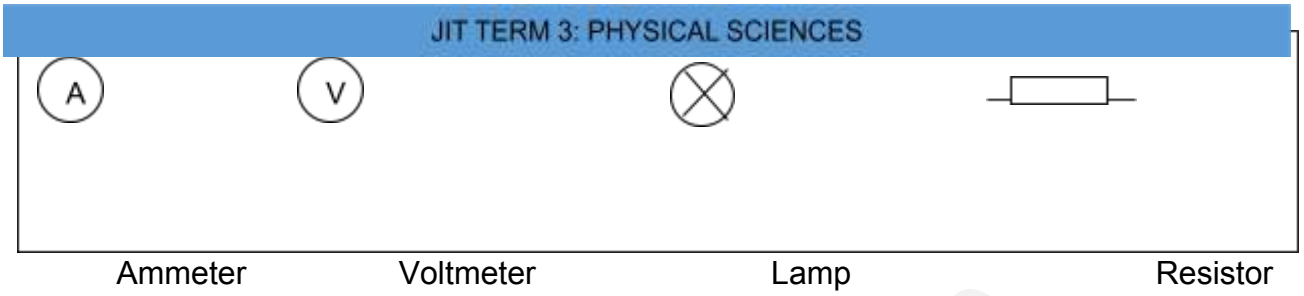

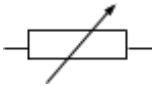
Rheostat (variable resistor)

cell

Switch

ENERGY SOURCES

Electrical energy is provided by sources such as a cell, battery or dynamo. A battery is a combination of cells.

Cells can be connected in series or parallel.

The **emf** (electromotive force) of a cell is the maximum quantity of electrical energy that can be supplied per coulomb of charge when no current is flowing through the cell. The symbol for emf is E.

Series:
Cells are connected in series when their terminals are connected in a positive to negative sequence:

The total emf of a battery of cells connected in series is equal to the algebraic sum of the emf's of the individual cells.

$E_T = E_1 + E_2 + E_3 + \ldots\ldots\ldots\ldots\ldots$.

NB: The advantage of connecting cells in series is that the total emf is increased thus producing a stronger current.

Parallel:
Cells are connected in parallel when their positive and negative terminals are connected as in the sketch below:

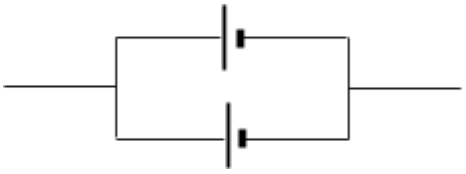

The total emf of a battery of cells connected in parallel is equal to the emf of a single cell, provided that all the cells have the same emf.

Downloaded from eduresourceza.com

Downloaded from eduresourceza.com

resistance of the battery in the circuit is decreased thus reducing the internal energy lost.

$E_T = E_1 = E_2 = E_3 = \ldots\ldots\ldots\ldots$.

Examples:

Each of the cells has an emf of 2 V. Calculate the emf of the following batteries:

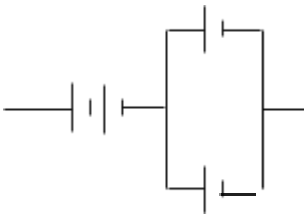

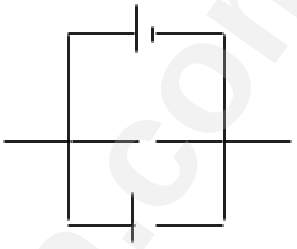

8 V

2 V

6 V

SIMPLE

CIRCUIT

A simple circuit consists of a cell, conducting wires, resistor and switch.

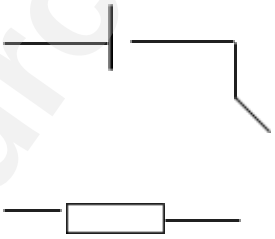

POTENTIAL DIFFERENCE

The potential difference between two points in a circuit is the energy required to move one coulomb of charge between the points.

$V = \frac{W}{Q}$, where V = potential difference (V), W = work done (J) and Q = charge (C).

Example 1:

Calculate the potential difference between two points if 20 J of work are required to move a charge of 2 C.

$$V = \frac{W}{Q} = \frac{20}{2} = 2\ V$$

Example 2:

Calculate the work done in moving a charge of 5 C through a potential difference of 2 V.

Downloaded from eduresourceza.com

Downloaded from eduresourceza.com

CURRENT

An electric current is the rate of flow of charge (positive or negative) from one point to another in an electrical circuit.

Conventional current is the flow of positive charge and its direction is from the positive terminal to the negative terminal of a cell.

Since a current in a metal is conducted by negative electrons, the electron current flows from negative to positive. However, current direction in metals is always based on the direction that a positive charge would take and is therefore the direction of a conventional current, i.e. from positive to negative.

Current strength is the rate at which charge passes a given point in a conductor. The unit of current strength is the ampere (A). (The use of the abbreviation "amp" is incorrect.)

$I = \frac{Q}{t}$ where I is the current strength (A), Q = charge (C) and t = time (s).

Example 1:

Calculate the current strength when 5 C of charge passes a given point in 2 s.

$$I = \frac{Q}{t} = \frac{5}{2} = 2{,}5\ A$$

Example 2:

Calculate the quantity of charge passing a point in a circuit when a current of 5 A flows for 10 s.

Q = It = 5 x 10 = 50 C

The formula Q = It can be used to define a Coulomb.

A coulomb is the quantity of charge that passes through a conductor when a current of one ampere flows for one second.

CONDUCTION IN A METAL

In a metal, the atoms are packed closely in a crystal lattice. The outermost electrons of the metal atoms are held loosely and can escape the attractive forces of their nuclei to

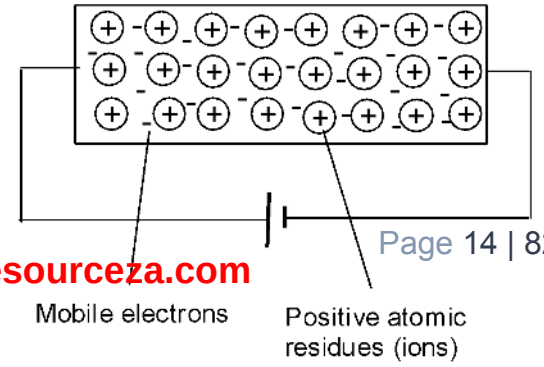

Downloaded from eduresourceza.com

Downloaded from eduresourceza.com

form positively charged metal ions. These electrons are called **free**

If a potential difference is applied across the ends of the conductor, an electric field is set up in the conductor. Negatively charged electrons are attracted to the positive terminal while the metal ions remain stationary because they are held in a crystal lattice. The movement of electrons is impeded by collisions with the positive metallic ions causing resistance. Every electron that leaves a conductor at the positive terminal is replaced by another from the negative terminal. The overall charge of a conductor is therefore neutral.

RESISTANCE

The resistance of a conductor is a measure of how much difficulty charges experience in passing through the conductor. A good conductor has a low resistance and a poor conductor has a high resistance. Resistance is caused by collisions between electrons and metal atoms that interfere with the flow of charge.

The following factors affect the resistance of a conductor:

(1) type of metal used.
(2) length of the conductor.
(3) thickness (or cross-sectional area).
(4) temperature.

Resistance is defined as the ratio of potential difference across the ends of a conductor and current strength.

$R = \frac{V}{I}$ where R = resistance (Ω), V = potential difference (V) and I = current strength (A).

An ohm is the resistance of a conductor when a potential difference of one volt causes a current of one ampere to flow through it.

Example:

Calculate the resistance of a conductor when a current of 2 A flows when the potential across its ends is 10 V.

$$R = \frac{V}{I} = \frac{10}{2} = 5\,\Omega$$

OHM'S LAW

Ohm's Law states that current strength is directly proportional to the potential difference between the ends of a given resistor provided that temperature remains constant.

Mathematical statement: For a given resistor, $V \propto I$ at constant temperature.

Mathematical formula: $V = IR$

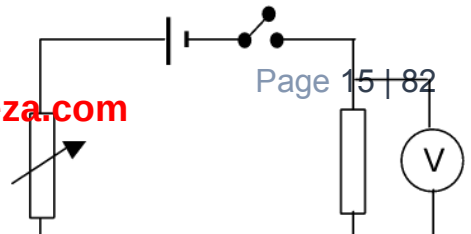

Downloaded from eduresourceza.com

Downloaded from eduresourceza.com

Experiment to verify Ohm's Law

Set up the apparatus as show in the accompanying diagram.
Vary the potential difference across the resistor by moving the rheostat and take five readings of potential difference and current.
Precaution: Keep the temperature of the resistor constant.
Tabulate your results as follows:

	Potential difference (V)	Current (A)	$\frac{V}{I}$ (Ω)
1	1,0	0,5	2
2	2,0	1,0	2
3	3,0	1,5	2
4	4,0	2,0	2
5	5,0	2,5	2

Plot a graph of V against I.

5

V = RI + 0

4

y = mx + c

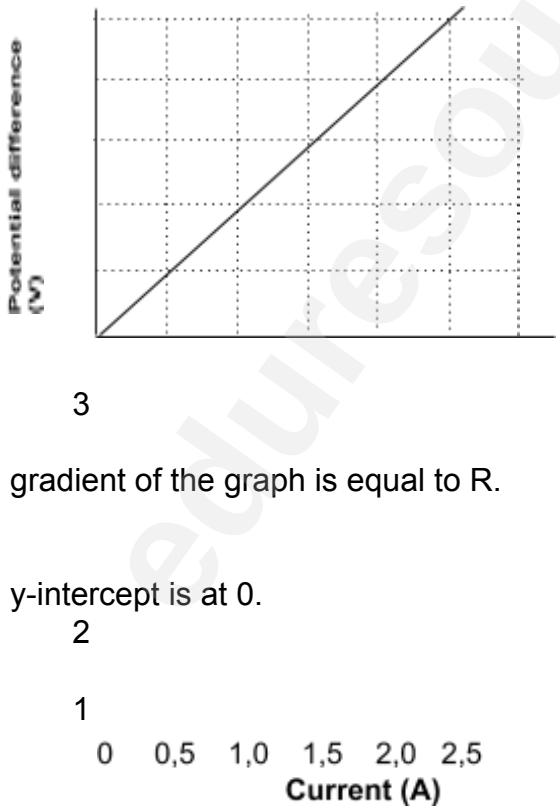

3

The gradient of the graph is equal to R.

The y-intercept is at 0.

2

1

Resistors connected in series

Downloaded from eduresourceza.com

Downloaded from eduresourceza.com

Resistors connected in series act as potential dividers.

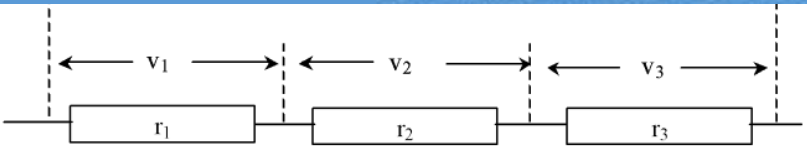

$V = v_1 + v_2 + v_3$ ∴ $IR = Ir_1 + Ir_2 + Ir_3$ ∴ $R = r_1 + r_2 + r_3$ (Divide by the common factor I.)

The total resistance of a combination of resistors connected in series is equal to the algebraic sum of the component resistors.

$R = r_1 + r_2 + r_3 + \ldots\ldots.$

Example:

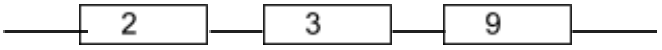

$R = r_1 + r_2 + r_3 = 2 + 3 + 9 = 14\ \Omega$

In the accompanying diagrams, a cell with an emf of 10 V and negligible internal resistance is connected in parallel with a 2 Ω resistor and a rheostat. The resistance of the rheostat is adjusted to illustrate how the potential difference across resistors can be varied.

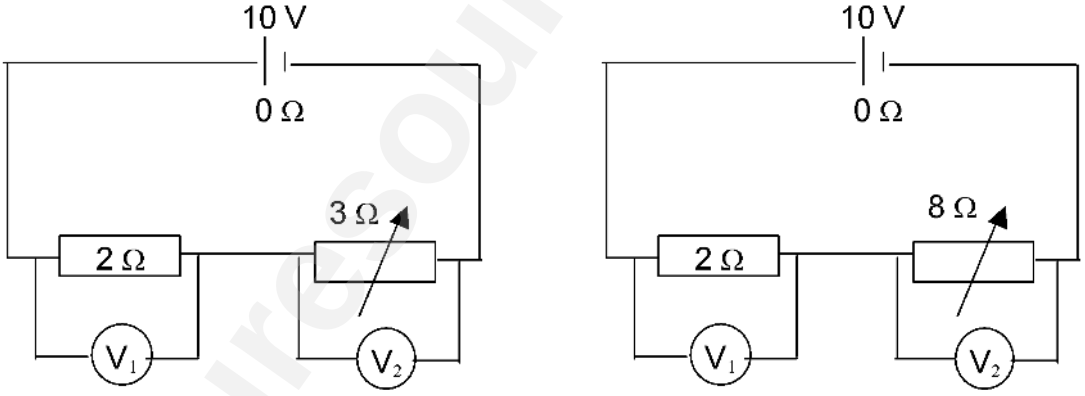

The resistance of the rheostat is increased from 3 Ω in Diagram 1 to 8 Ω in Diagram 2 causing a different division in potential difference across the resistors.

$R = r_1 + r_2$

$$I = \frac{V}{R} = \frac{10}{10} = 1\ A$$

$= 2 + 3 = 5\ \Omega$

$$I = \frac{V}{R} = \frac{10}{5} = 2\ A$$

$V_1 = IR = 2 \times 2 = 4\ V$ $V_2 = IR = 2 \times 3 = 6\ V$

$R = r_1 + r_2$

$= 2 + 8 = 10\ \Omega$

$V_1 = IR = 1 \times 2 = 2\ V$ $V_2 = IR = 1 \times 8 = 8\ V$

Downloaded from eduresourceza.com

Downloaded from eduresourceza.com

$v = \frac{r}{R}V = \frac{2}{5} \times 10 = 4V$ $\quad v = \frac{r}{R}V = \frac{3}{5} \times 10 = 6\,V$ $\quad v = \frac{r}{R}V = \frac{2}{10} \times 10 = 2\,V$

$v = \frac{r}{R}V = \frac{8}{10} \times 10 = 8\,V$

The above calculations show how the division of potential difference increases across the rheostat as the resistance is increased

<u>Resistors connected in parallel</u>

Resistors connected in parallel act as current dividers.

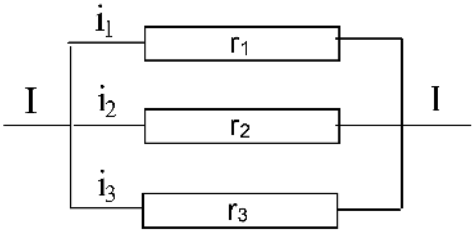

$I = i_1 + i_2 + i_3 \therefore \frac{V}{R} = \frac{V}{r_1} + \frac{V}{r_2} + \frac{V}{r_3} \therefore \frac{1}{R} = \frac{1}{r_1} + \frac{1}{r_2} + \frac{1}{r_3}$
(Divide by the common factor, V.)

The reciprocal of the total resistance is equal to the sum of the reciprocals of the resistances of the component resistors.

Example:

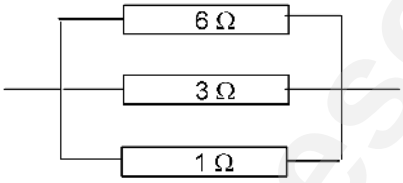

$\frac{1}{R} = \frac{1}{r_1} + \frac{1}{r_2} + \frac{1}{r_3} = \frac{1}{6} + \frac{1}{3} + \frac{1}{1} = \frac{1+2+6}{6} = \frac{9}{6} \therefore R = 0{,}67\,\Omega$

Consider the following combination of resistors connected in parallel that act as current dividers.

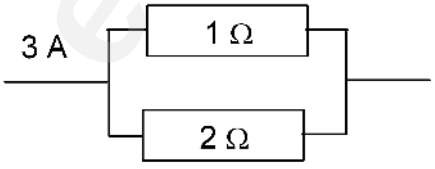

The current flowing through resistors connected in parallel will be inversely proportional to their resistances, i.e. the greater the resistance the smaller the current.

Downloaded from eduresourceza.com

Downloaded from eduresourceza.com

The ratio of the resistances is 2 : 1 (total 3). Two-thirds of the current will therefore flow

will flow down the resistor having the smaller resistance.

1 Ω resistor: $\frac{2}{3} \times 3 = 2\ A$

2 Ω resistor: $\frac{1}{3} \times 3 = 1\ A$

METERS

An ammeter measures the strength of an electric current. It has a low resistance and is connected in series in a circuit.

A voltmeter measures the potential difference between two points in a circuit. It has a high resistance and is connected in parallel across the two points.

POWER

Power is the rate at which work is done.

$P = \frac{W}{t}$, where P = power in watts (W), W = work in joules (J) and t = time (s).

Downloaded from eduresourceza.com

Downloaded from eduresourceza.com

Example 1:

Calculate the power when 100 J of electrical energy is used in 2 seconds.

$$P = \frac{W}{t} = \frac{100}{2} = 50\ W$$

Example 2:

Calculate the electrical energy used when a 100 W electric bulb burns for 2 minutes.

W = Pt = 100 x 2 x 60 = 12 000 J

Other formulae for power and work:

W = QV = VIt (Substituting the formulae W = QV and Q = It)

$$P = \frac{W}{t} = \frac{VIt}{t} = VI$$

$$P = VI = V \times \frac{V}{R} = \frac{V^2}{R}$$ (Substituting $I = \frac{V}{R}$)

P = VI = IR x I = I^2R (Substituting V = IR)

W = Pt = I^2Rt

W = Pt = $\frac{V^2}{R}t$

Electricity Cost

Solve circuit problems involving the concepts of power and electrical energy.

- Deduce that the kilowatt hour (kWh) refers to the use of 1 kilowatt of electricity for 1 hour.
- Calculate the cost of electricity usage given the power specifications of the appliances used, the duration and the cost of 1 kWh.
- ESKOM or local municipality charges a tariff per kWh used. To calculate the cost of electricity, we multiply the kilowatt-hour (energy units) reading on the meter by the unit price per kilowatt-hour.
- Energy units (E)= power(P) x time(t)
- Where: energy units are measured in kWh, Power in kW and Time in hours
- **Cost = E x price per kWh**

NB: price per kWh must be in Rands (R)

Downloaded from eduresourceza.com

Downloaded from eduresourceza.com

eduresourceza.com

Downloaded from eduresourceza.com

Downloaded from eduresourceza.com

Examples

the highest setting, and for the last 3 hours, it is on lowest setting.

1.1) How much energy does it transfer to the room in kWh? (**9kWh**)

1.2) What is the cost of heating the room if the electricity costs 70c per kWh? (**R6.30**)

2. The reading on the electricity meter shows that 30kWh of energy have been supplied to a house during one day.

2.1) What is the average power consumption (per hour) of the house in this time? (**1,25 kW**)

2.2) Electricity is charged at 70c per kWh. How much will the electricity bill be for that day? (**R21,00**)

INTERNAL RESISTANCE - LOST VOLTS EFFECT

The emf of a cell is the energy per coulomb available across the terminals of a cell when no current flows.

Since a cell has resistance, energy is used to overcome the internal resistance when a current flows. This results in a decrease in potential difference across the terminals because less energy per coulomb is available to drive a current around the external circuit. The decrease in potential difference is called the lost volts effect.
Internal resistance is the opposition to the flow of charges within the cells that make up the battery.

Emf = potential difference + energy used per coulomb to overcome internal resistance.

E = V + Ir where E is the emf (V), V the potential difference (V), I the current (A) and r the internal resistance (Ω).

OR

V = E – Ir

CIRCUIT DIAGRAM

Example 1
In the accompanying circuit diagram, a battery has an emf of 30V. Resistance of the battery and wires is negligible

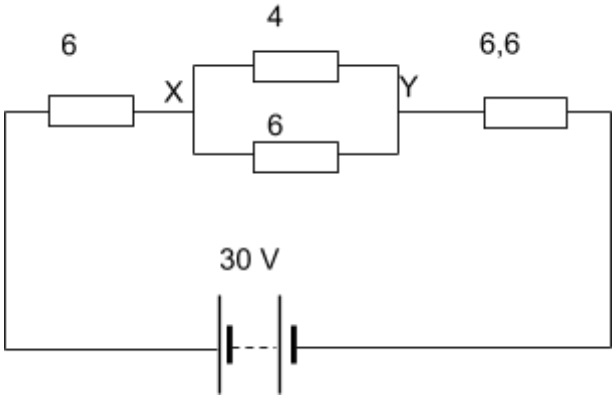

Downloaded from eduresourceza.com

Downloaded from eduresourceza.com

Calculate: 1.1 The total resistance of the circuit.

1.2 The total current in the circuit.

1.3 The current through the 4Ω resistor

Example 2 :

In the accompanying circuit diagram, each cell has an emf of 2 V and internal resistance of 0,5 Ω.

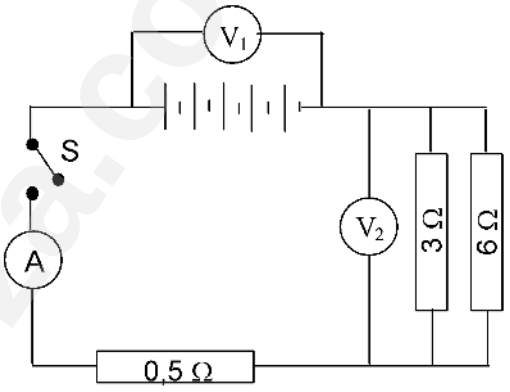

1. Calculate the readings on A, V_1 and V_2 when the switch is open.

2. Calculate the following when switch S is closed:

2.1 the total resistance of the circuit.
2.2 the reading on A
2.3 the reading on V_2
2.4 the charge passing through A in 2 minutes.
2.5 the power used by the 0,5 Ω resistor.

Solutions

1. V_1 = 5 x 2 = 10 V V_2 = 0 V and A = 0 A

2.1 Resistance of cells in series: R = $r_1 + r_2 + r_3 + r_4 + r_5$ = 5 x 0,5 = 2,5 Ω

Resistance of resistors in parallel:

$$\frac{1}{R} = \frac{1}{r_1} + \frac{1}{r_2} = \frac{1}{6} + \frac{1}{3} = \frac{1+2}{6} = \frac{3}{6} \therefore R = 2\,\Omega$$

Total resistance of circuit: R = $r_1 + r_2 + r_3$ = 2,5 + 2 + 0,5 = 5 Ω

2.2 A: $I = \frac{V}{R} = \frac{10}{5} = 2\text{ A}$

2.3 V_2: V = IR = 2 x 2 = 4 V

Downloaded from eduresourceza.com

Downloaded from eduresourceza.com

(The resistance between the points to which the voltmeter is connected is equivalent

through the two resistors is 2 A.)

2.4 $Q = It = 2 \times 2 \times 60 = 240$ C

2.5 $P = I^2R = 2^2 \times 0,5 = 2$ W.

Downloaded from eduresourceza.com

Downloaded from eduresourceza.com

A battery of an unknown emf and an internal resistance of 0,5 Ω is connected to three resistors, a high-resistance voltmeter and an ammeter of negligible resistance, as shown below.

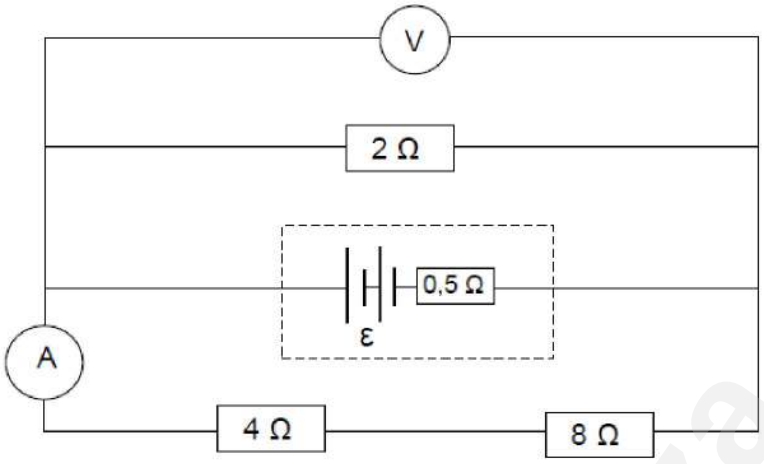

The reading on the ammeter is 0,2 A.

9.1 Calculate the:

9.1.1 Reading on the voltmeter (3)

9.1.2 Total current supplied by the battery (4)

9.1.3 Emf of the battery (5)

9.2 How would the voltmeter reading change if the 2 Ω resistor is removed from the circuit? Write down INCREASE, DECREASE or REMAIN THE SAME. Explain the answer. (3)

<u>Question 6</u> (ieb Trial 2013 – Hilton College)

ELECTRIC CURRENT

6.1) In the circuit in **Figure 1**, the battery, of emf 15 V and negligible internal resistance, is connected in series with two lamps and a resistor. The three components each have a resistance of 12 Ω.

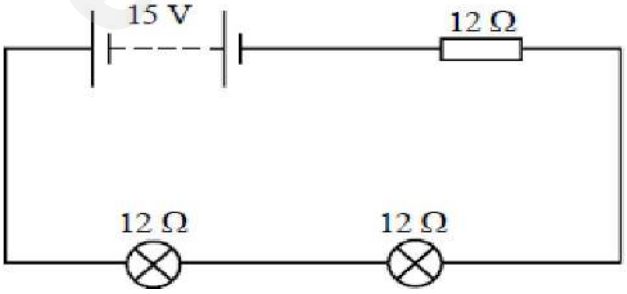

6.1.1) Write down the voltage across each lamp (no working required).
(1)

Downloaded from eduresourceza.com

Downloaded from eduresourceza.com

6.1.2) Calculate the current through the lamps.

(3)

6.2) A battery of emf ∈ and internal resistance *r* is connected in series to a variable resistor R and an ammeter of negligible resistance. A voltmeter is connected across R, as shown in the figure below.

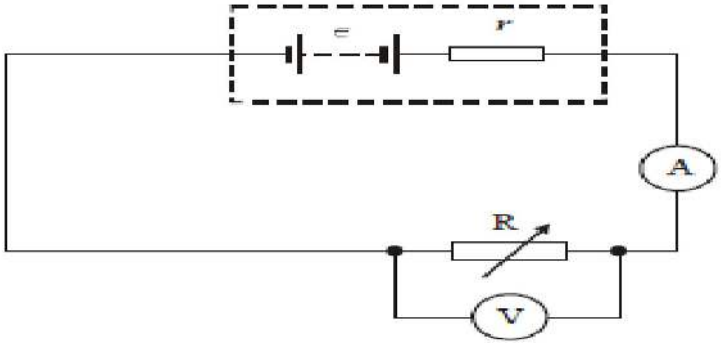

6.2.1) State what is meant by the emf of the battery and under what conditions this is achieved by the battery, assuming the battery has internal resistance. (2)

6.2.2) Explain why the voltmeter must be connected as shown in the diagram above? (2)

A student wishes to measure ∈ and *r*. Using the circuit shown in the figure above the value of R is decreased in steps and at each step the readings *V* and *I* on the voltmeter and ammeter respectively are recorded. These are shown in the table.

reading on voltmeter/V	reading on ammeter/A
8.3	0.07
6.8	0.17
4.6	0.33
2.9	0.44
0.3	0.63

6.2.3) Write down an expression relating *V, I*, ∈ and *r.*

(1)

6.2.4) Draw a graph of *V* (on the *y*-axis) against *I* (on the *x*-axis)

(7)

6.2.5) Use your expression in 6.2.3 and the equation for a straight line (y=mx+c), to determine the values of ∈ and *r* from the graph. (The graph should be marked appropriately to indicate how you obtained your answer)

(4)

Downloaded from eduresourceza.com

Downloaded from eduresourceza.com

Question 7 **(ieb Trial 2011 – Hilton College)**

ELECTRIC CURRENT

The circuit diagram below shows a battery, with internal resistance r, connected to three resistors M, N and Y. The resistance of N is 2 ohms and the reading on the voltmeter V is 14 V. The reading on ammeter A_1 is 2A and the reading on ammeter A_2 is 1A. **(The reading of the ammeter and wires may be ignored).**

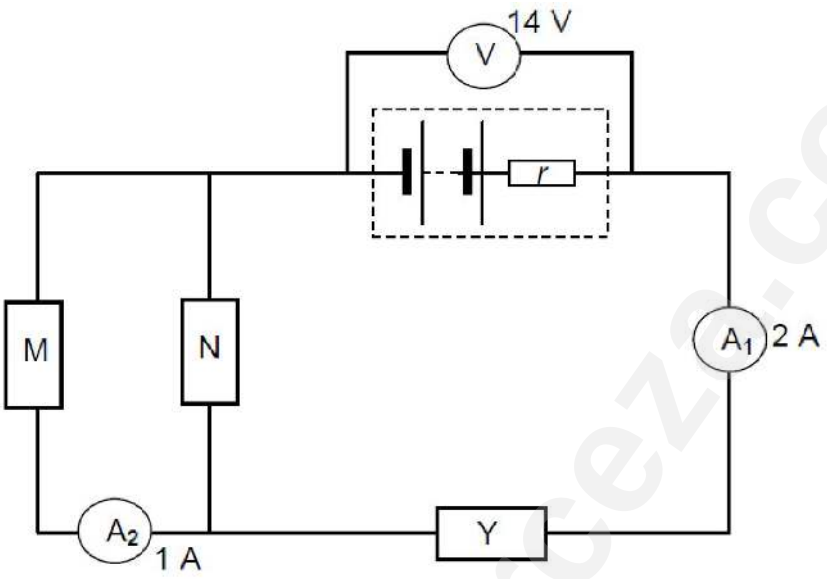

7.1) State Ohms law in words.

(2)

7.2) How does the resistance of M compare with that of N? Explained how you arrived at the answer.

(2)

7.3) If the emf of the battery is 17 V, calculate the internal resistance of battery. (5)

7.4) Calculate the potential difference across resistor N.

(3)

7.5) Calculate the resistance of Y.

(4)

Question 5 **(ieb November 2013)**

AMBULANCE

Tommy has a toy ambulance which has a light, a siren and a motor. The circuit diagram for the electric circuit of the ambulance is given below. The resistances of the battery, ammeter, switches and connecting wires can be ignored.

Downloaded from eduresourceza.com

Downloaded from eduresourceza.com

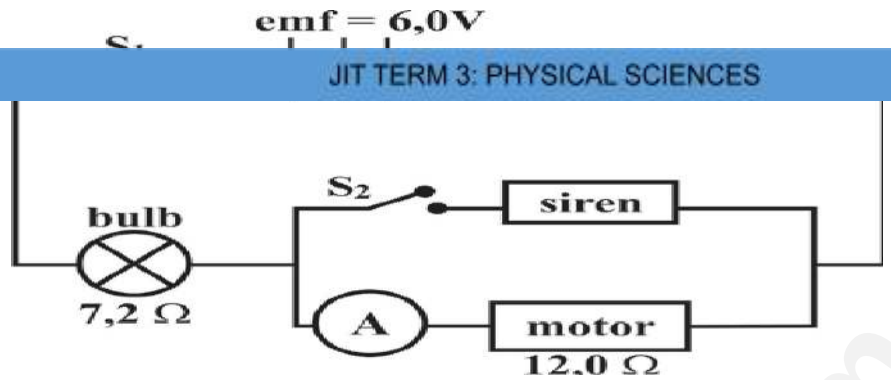

When Tommy closes ONLY switch 1 (S_1) (with switch 2 (S_2) open), the light comes on while the ambulance moves at a constant speed.

5.1) Calculate the reading on the ammeter when only switch 1 (S_1) is closed. Give your answer to 2 decimal places.

(4)

5.2) Calculate the rate of energy transfer (power) in the bulb when only switch 1 is closed. Give your answer to 2 decimal places.

(4)

When Tommy closes both switches 1 (S_1) and 2 (S_2) the siren sounds and the reading on the ammeter is 200 mA.

5.3) Calculate the potential difference across the motor.

(3)

5.4) Calculate the new current through the bulb.

(3)

5.5) Calculate the total resistance of the circuit.

(3)

5.6) Calculate the resistance of the siren.

(4)

5.7) How will the following change when the siren sounds? (Write only *increase, decrease* or *no effect*).

5.7.1) The brightness of the bulb.

(1)

5.7.2) The speed of the ambulance.

(1)

5.8) Explain your answer to Question 5.7.1 with reference to one or more suitable formulae.

(2)

5.9) Explain your answer to Question 5.7.2 with reference to one or more suitable

Downloaded from eduresourceza.com

Downloaded from eduresourceza.com

formulae.

(2)

Question 7 (ieb November 2014)

ELECTRIC CURRENT

7.1 An electric circuit is set up as shown in the diagram below. The resistances of the switch, ammeters and connecting wires are negligible. The voltmeters have very high resistance. The battery has an emf of 12 V and has significant internal resistance (*r*).

The switch S_1 is CLOSED. The ammeter A_2 reads 0,2 A and the voltmeter V_2 reads 5,5 V.

7.1.1 Define *emf*.
(2)

7.1.2 Calculate the reading on ammeter 1 A .
(4)

7.1.3 Calculate the resistance of resistor **X**.
(3)

7.1.4 Calculate the total external resistance of the circuit.
(3)

7.1.5 Calculate the internal resistance (*r*) of the battery.
(4)

7.1.6 Resistor **X** is replaced by a new resistor of greater resistance than that of **X**.

(a) Will the reading on the voltmeter **1 V** connected across the terminals of the battery *increase, decrease or remain the same?*
(1)

(b) Explain your answer to Question 7.1.6 (a), making reference to relevant formulae.

(4)

7.2 An electric kettle is rated 240 V; 1 800 W.

7.2.1 What does 'rated 240 V; 1 800 W' mean in regard to how this kettle works? (2)

7.2.2 Calculate the current drawn by the kettle when connected to a 240 V source.
(3)

7.2.3 Calculate the cost of using the kettle for 15 minutes if electricity costs R1,40 per kWh.

(3)

Downloaded from eduresourceza.com

Downloaded from eduresourceza.com

Question 9 **(DBE November 2015)**

A battery with an internal resistance of 1 Ω and an unknown emf (ε) is connected in a circuit, as shown below. A high-resistance voltmeter (V) is connected across the battery. **A_1** and A_2 represent ammeters of negligible resistance.

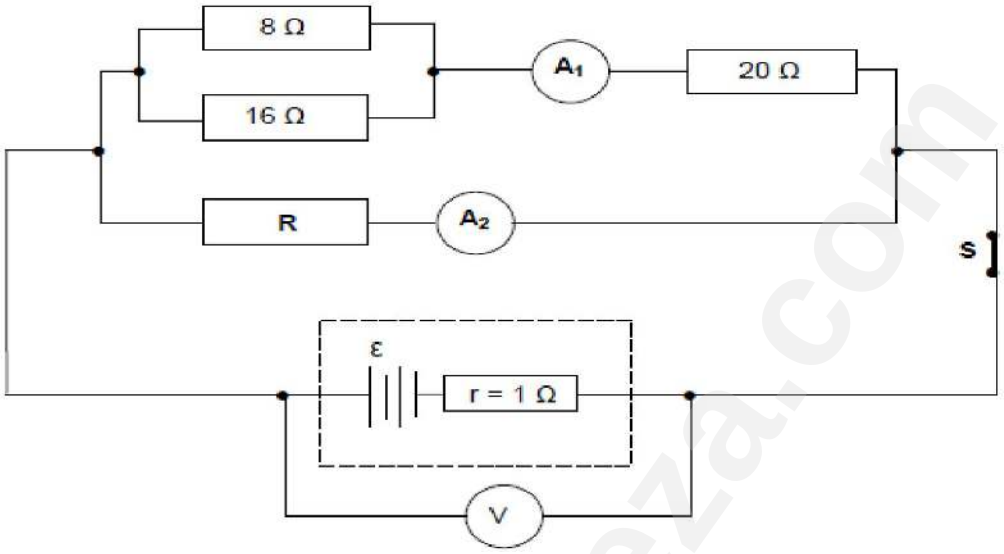

With switch **S** closed, the current passing through the 8 Ω resistor is 0,5 A.

9.1 State Ohm's law in words.
(2)

9.2 Calculate the reading on ammeter A_1.
(4)

9.3 If device **R** delivers power of 12 W, calculate the reading on ammeter A_2. (5)

9.4 Calculate the reading on the voltmeter when switch **S** is open. (3)

Question 8 (Free State Trail 2015)

8.1) The graph below is obtained from an experiment to calculate the internal resistance of a battery.

Downloaded from eduresourceza.com

Downloaded from eduresourceza.com

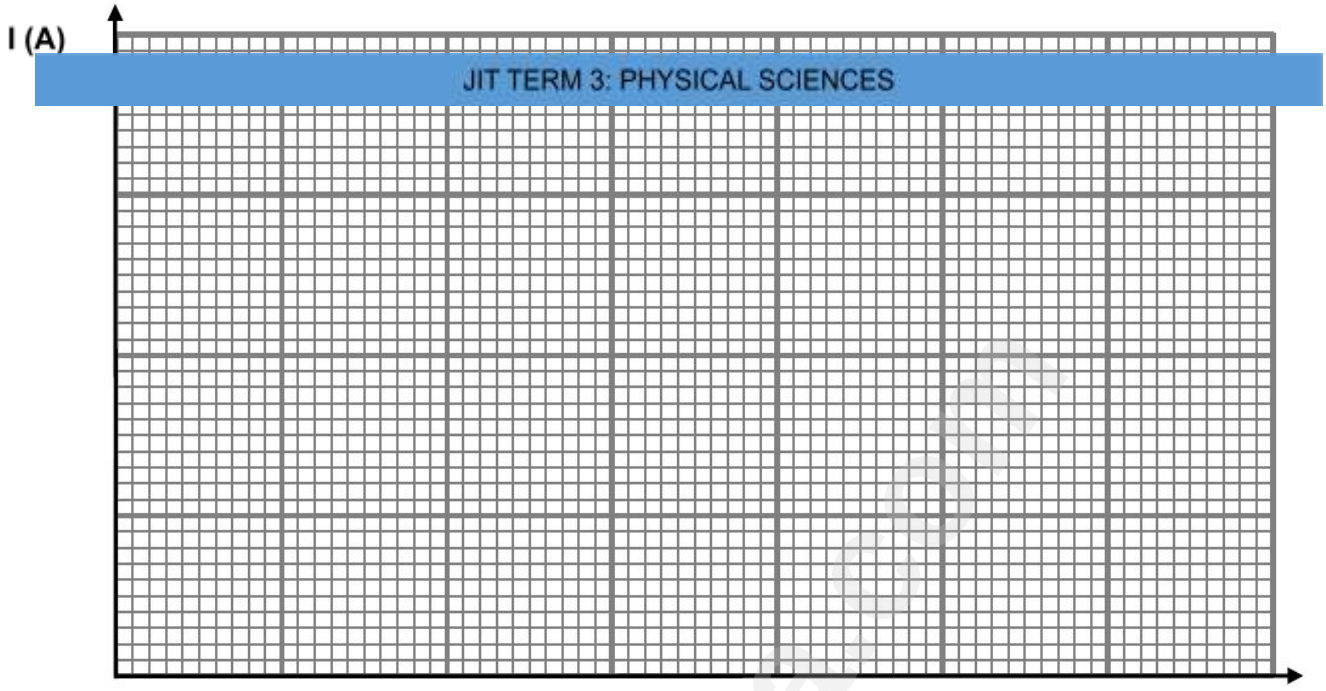

Graph of current versus potential difference

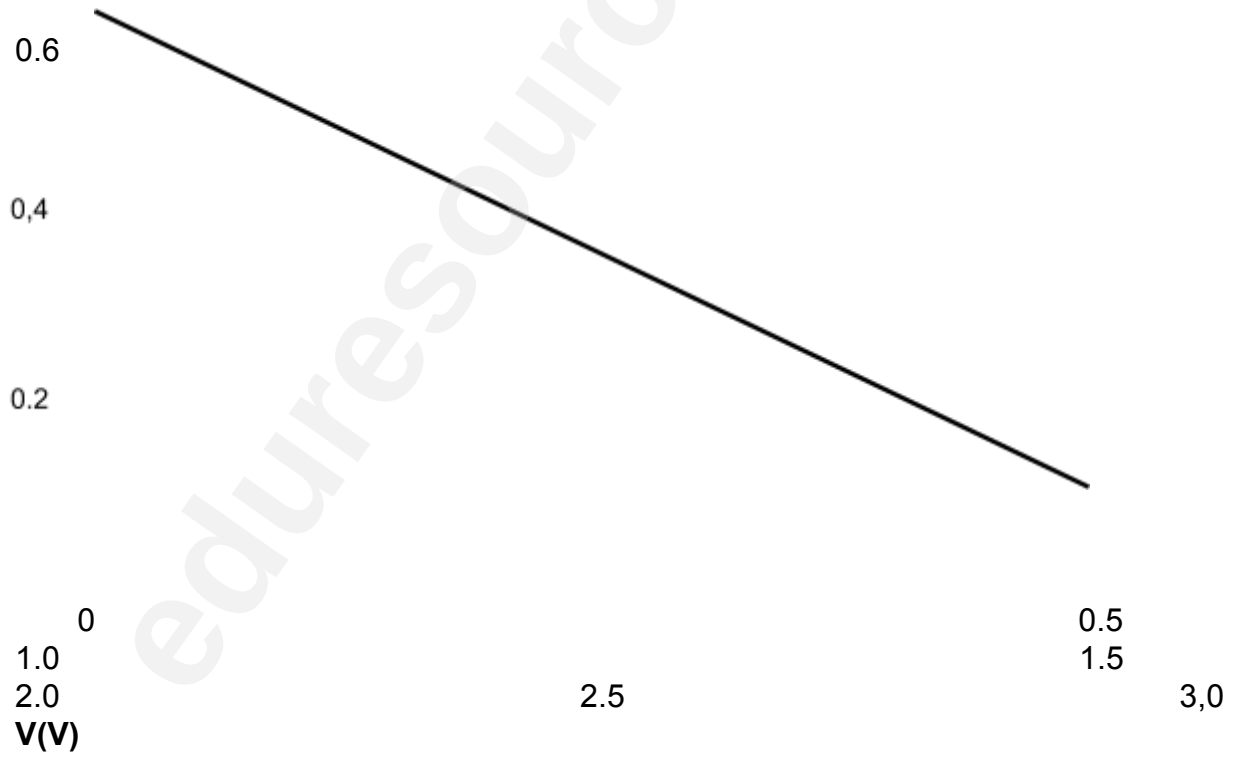

8.1.1) Calculate $V_{internal}$ if the current in the circuit is equal to 0,2 A..
(2)

8.1.2) Calculate the internal resistance of the battery.
(4)

8.2) A circuit is connected as shown below. When switch S_1 is closed, $V_{external}$ is

Downloaded from eduresourceza.com

Downloaded from eduresourceza.com

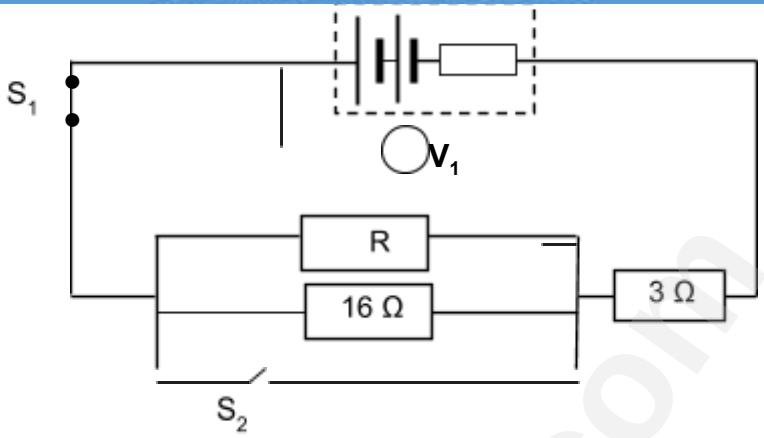

8.2.1) Define Ohm's Law in words. (2)

8.2.2) Calculate the power dissipated by the 16 Ω resistor. (7)

8.2.3) Calculate the resistance of **R**. (5)

8.2.4) Switch S_2 is now closed. How will voltmeter reading V_1 be influenced? (Write down only INCREASE, DECREASE or STAYS THE SAME.) Give an explanation to your answer. (4)

Downloaded from eduresourceza.com

Downloaded from eduresourceza.com

ELECTRODYNAMICS

There are various forms of rotating electrical machines. However, they can be divided into:

Generators – which convert **mechanical energy** into **electrical energy**. Based on the principle of Faraday's Law of Electromagnetic Induction.

Motors – which convert **electrical energy** into **mechanical energy**. Based on the principle of Fleming's Motor Rule.

- Both types operate through the interaction between a magnetic field and a set of windings (coils).
- A current- carrying conductor has a magnetic field induced around it.
- A magnetic field can cause an electric current i.e. a changing magnetic field can induce an emf, resulting in the flow of current. Such a current is called an induced current.
- The strength of the induced current increases when:
    - the speed of movement of magnet relative to the coil increases
    - the magnetic flux linkage is increased (i.e. a stronger magnet)
    - the number of turns increases

GENERATORS

Generators work on the principle of **magnetic induction**.

Faraday's Law of Electromagnetic Induction: An emf is induced in a conductor when there is a change in the surrounding magnetic field. **The magnitude of the induced emf is directly proportional to the rate of change of magnetic flux.**

AC generators

The principle of rotating a conductor in a magnetic field is used in electrical generators. A generator converts mechanical energy into electrical energy.

The diagram below shows a simple generator:

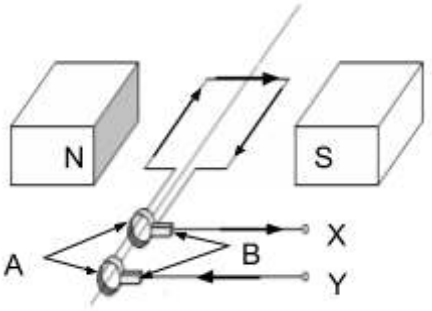

N = North Pole magnet

Downloaded from eduresourceza.com

Downloaded from eduresourceza.com

S = South Pole magnet

B = carbon brushes

The coil is connected to **slip ring commutators**.

The commutators make contact with the carbon brushes, which ensures that the current can flow.

As the coil rotates in the magnetic field, it experiences an **induced emf**.

According to Fleming's Right Hand Rule, **an induced current** will now flow.

The direction of the current **changes** with every half turn of the coil. This gives rise to **alternating current**.

DC generators

A simple DC generator is constructed in the same way as an AC generator except that the slip ring commutator is now replaced by a **split ring commutator**. The split ring commutator only allows current to flow in one direction.

MOTORS

Motors work on the principle of **Fleming's Left Hand Motor Rule**.

DC motors

Motor converts electrical energy into mechanical energy.

The diagram below shows a simple diagram of a dc motor.

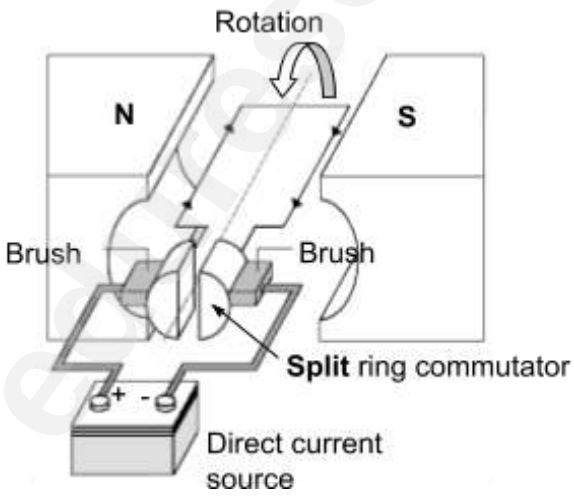

- The split ring commutator serves as a change switch that reverses the current after every half revolution.
- The brushes maintain electrical contact between the battery and the turning commutator.

Downloaded from eduresourceza.com

Downloaded from eduresourceza.com

- The current in the coil flows through the magnetic field in the opposite direction.

- In the vertical position, the gaps between the commutator segments are bridged by the brushes and the current is therefore short-circuit for a moment through the commutator, and no current flows in the coil.
- The momentum of the coil carries it past this position.
- As soon as the coil passes the vertical position, each one of the brushes makes contact with the other commutator segment.
- The direction of the current in the coil is therefore reversed and the coil continues turning.
- After every half revolution the current through the coil is reversed and in this way the coil continues turning clockwise.

AC motors

An AC motor is very similar to a DC motor, except that the split ring commutator is replaced by a **slip ring commutator** and the current is now an alternating current and not a direct current.

Uses of AC generators

- To generate electricity at power stations
- Provision of electricity to equipment at construction sites
- Provision of electricity to businesses and industries
- Bicycle dynamo

Uses of DC generators

- Factories that do electroplating require huge amount of direct current
- In older vehicles DC generators are used to charge batteries to supply the vehicle with electricity

Uses of motors

Hairdryers, washing machines, household electrical equipment etc

Alternating current (AC)

An alternating current (AC) is a current that keeps **changing direction backwards and forwards i**n a repetitive manner. The electricity supplied by Eskom is alternating current, it changes direction 50 times per second i.e.: it has a frequency of 50 Hz. It is important that this **frequency is maintained** to avoid damage to electrical equipment.

Downloaded from eduresourceza.com

Downloaded from eduresourceza.com

Alternating current, rather than direct current is used because electricity needs to be

power cables. This is in order to be able to increase the voltages from the power stations and to reduce it again before it reaches the home.

Transformers must be used to step the voltage **down** in order to reduce the heating effect. Transformers make use of the **concept of mutual induction** and this can only work on alternating current. It is also easier to generate alternating current than direct current.

REMEMBER:

SPLIT RING COMMUTATOR = **DC** = direct current **= current in one direction**

SLIP RING COMMUTATOR = **AC** = alternating current **= current changing direction every 180 degrees**

The actual effect of the alternating current is less than the maximum value would suggest. So we work with values that represent the equivalent direct current values, also **voltage and power**.

Root mean square (abbreviated **RMS or rms**), also known as the quadratic mean, is a **statistical measure of the magnitude of a varying quantity**. The name comes from the fact that it is **the square root of the** mean **of the** squares **of the values.** The following formulae are used:

$$I_{rms} = \frac{I_{max}}{\sqrt{2}} \quad \text{and} \quad V_{rms} = \frac{V_{max}}{\sqrt{2}}$$

The average power in an AC circuit is given by $P_{average} = V_{rms}I_{rms} = ½\, I_{max} V_{max}$ (for a purely resistive circuit).

The following graph shows the voltage vs time for an AC circuit:

Downloaded from eduresourceza.com

Downloaded from eduresourceza.com

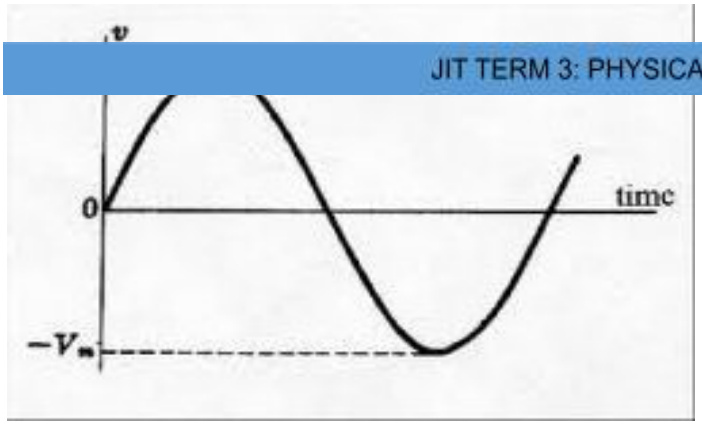

A similar graph can be drawn for the current vs time in an AC circuit:

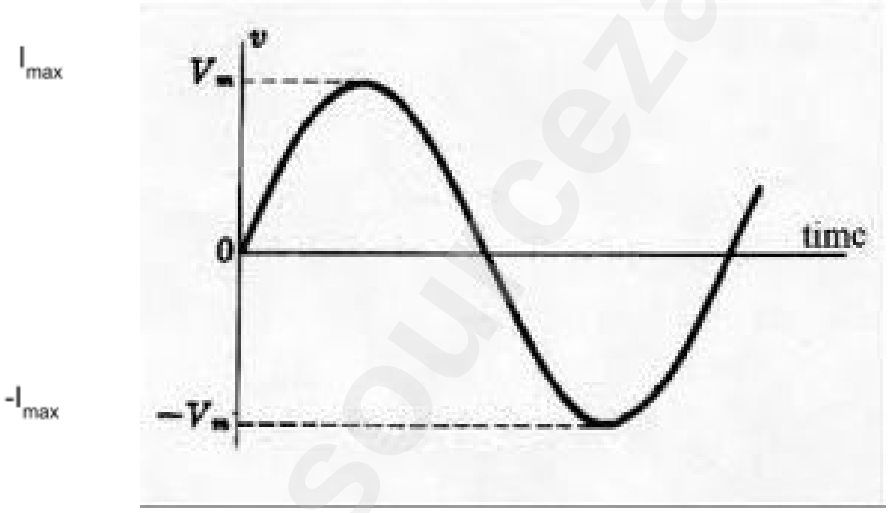

QUESTION 1: ***DBE FEB/MARCH 2013***

AC generators and DC generators differ in their construction and the type of current they deliver. The simplified sketch below represents a DC generator.

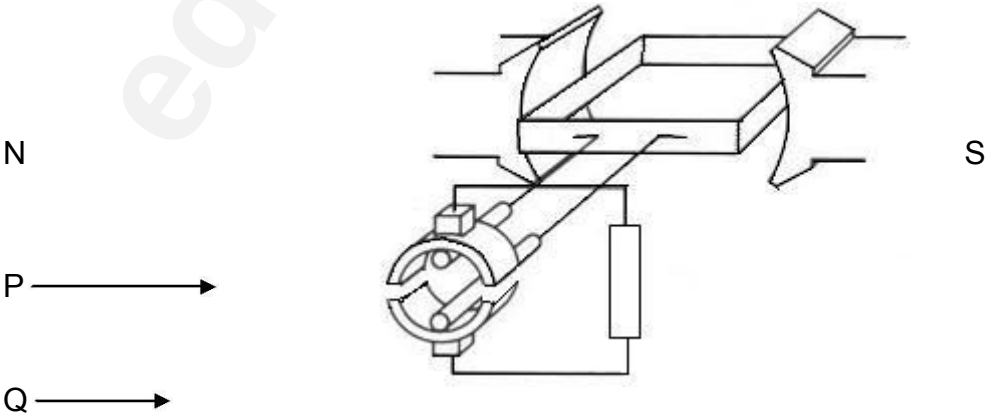

Downloaded from eduresourceza.com

Downloaded from eduresourceza.com

1.2 What structural change must be made to this generator to change it to an AC generator?

(1)

1.3 Briefly explain why Eskom prefers using AC instead of DC for the long-distance transmission of electricity.

(2)

1.4 An AC generator delivers 240 V_{rms} to a 60 W light bulb. The peak current in the light bulb is 0,35 A.

Calculate the:

1.4.1 rms current in the light bulb (3)

1.4.2 Resistance of the light bulb (3)

Downloaded from eduresourceza.com

Downloaded from eduresourceza.com

QUESTION 2: DBE *NOV 2012*

transmitted to a substation.

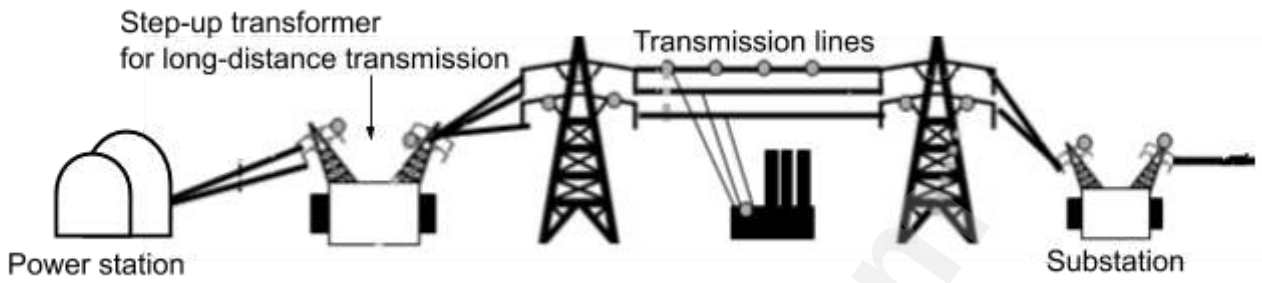

2.1 Does the power station use an AC or a DC generator? (1)

2.2 Sketch a graph of the potential difference generated at the power station versus time. (2)

2.3 The average power produced at the power station is $4,45 \times 10^9$ W. Calculate the rms current in the transmission lines if the power is transmitted at a maximum voltage of 30 000 V. (5)

2.4 Give a reason why electricity should be transmitted at high voltage and low current. (1)

QUESTION 3: DBE F*EB/MAR 2011*

AC generators at coal-fired power stations supply most of the electrical energy needed in our country.

3.1 State ONE structural difference between an AC and a DC generator. (2)

A certain AC generator (alternator) produces a peak current (I_{max}) of 6,43A when connected to an electrical heater of resistance 48,4 Ω.

3.2 Calculate the rms current (I_{rms}) produced by the generator. (3)

3.3 Calculate the peak voltage (V_{max}) output of the generator. (5)

3.4 Draw a sketch graph of potential difference versus time for this AC generator. Clearly label the axes and indicate V_{max} on the potential difference axis. (2)

3.5 To meet energy demands in the country, the government plans building nuclear power stations. State ONE environmental advantage of the generation of electricity in nuclear power stations over coal-fired power stations. (1)

QUESTION 4: DBE *NOV 2010*

The output of an AC generator is shown in the graph below.

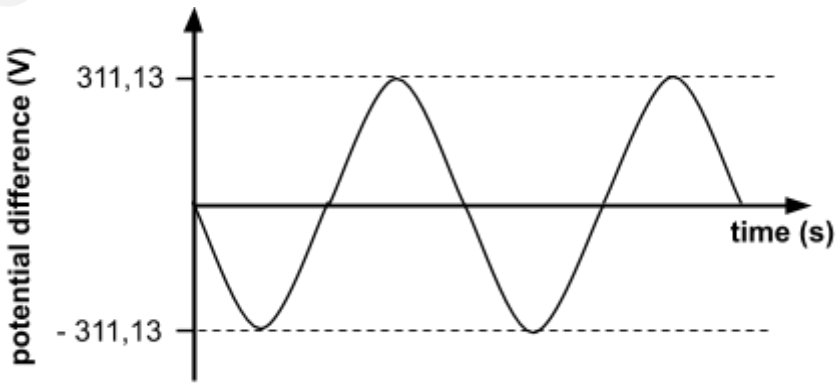

Downloaded from eduresourceza.com

Downloaded from eduresourceza.com

A light bulb with an average power rating of 100 W is connected to this generator.

4.1 Calculate the following:

4.1.1 rms potential difference across the light bulb (3)

4.1.2 Peak current (I_{max}) through the light bulb (5)

QUESTION 2: DBE *Nov 2009*

One type of electric motor is a DC motor.

2.1 Name the component, which ensures continuous rotation of the coil in a DC motor. (1)

2.2 Name the part of the motor, which becomes an electromagnet when the current flows in the motor. (1)

2.3 When the electric motor is connected to a 12 V DC supply, it draws a current of 1,2 A. The motor is now used to lift an object of mass 1,6 kg through a vertical height of 0,8 m at constant speed in 3 s.
Is all the electrical energy converted to the gain in potential energy of the object? Support your answer with relevant calculations. (7)

QUESTION 1: DBE NOV 2008

A coil is rotated anti-clockwise in a uniform magnetic field. The diagram below shows the position at the instant the coil lies parallel to the magnetic field.

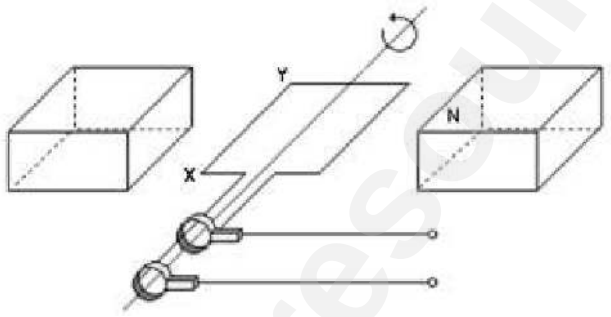

1.1 What type of generator is illustrated in the diagram? Give a reason for your answer. (2)

1.2 Determine the direction of the current in segment XY when the coil is in the position shown above. Only write down X to Y OR Y to X.
(2)

Assume that the speed and direction of rotation are constant. Draw a sketch graph of potential difference against time that represents the output of this device.
(2)

QUESTION 2: DBE 2010 MARCH

A simplified sketch of a generator is shown below.

Downloaded from eduresourceza.com

Downloaded from eduresourceza.com

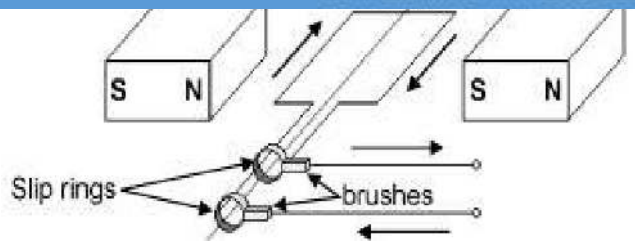

2.1 Is the output voltage AC or DC? Give a reason for your answer.
(2)
2.2 State TWO effects on the output voltage if the coil is made to turn faster.
(2)
2.3 What is the position of the coil relative to the magnetic field when the output voltage is a maximum?
(1)

QUESTION: DBE 2009 TRIAL
The simplified sketch drawn below shows the principle of operation of a generator.

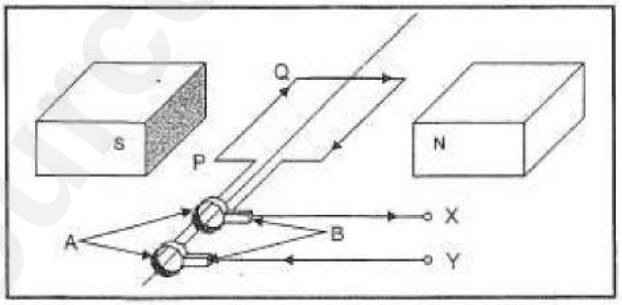

Does the sketch show an AC or a DC generator? Provide evidence from the sketch to substantiate your answer.
(2)
12.2 State whether the segment of the coil labelled PQ must be rotated clockwise or anticlockwise to produce the current in the direction as shown in the sketch.
(2)
12.3 Describe TWO methods that could be implemented to improve the output of the generator shown in the sketch.
(2)
12.4 Draw a labelled sketch graph of the induced emf versus time for the generator shown in the above sketch.
(3)

QUESTION 11 GAUTENG SEPTEMBER 2015
A learner built the following simple generator based on a dynamo used to power bicycle headlights. He used the generator to demonstrate that he could use mechanical energy to generate electrical energy.

Downloaded from eduresourceza.com

Downloaded from eduresourceza.com

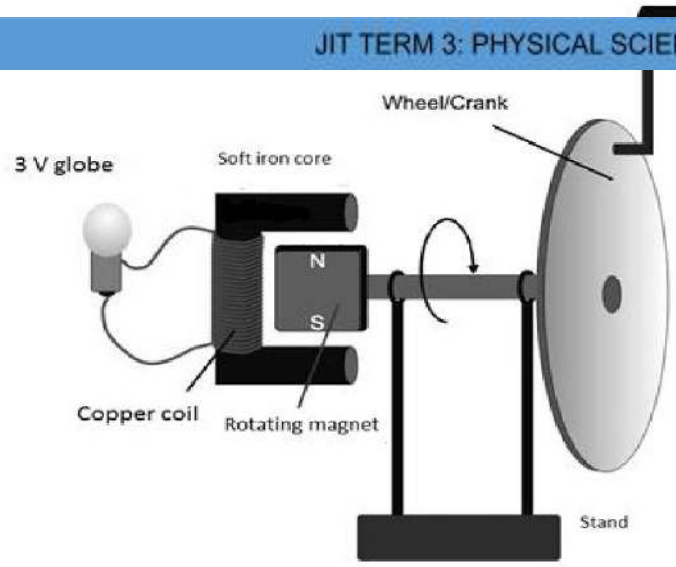

11.1 Is this a DC or an AC generator? Give a reason for the answer. (3)

11.2 How will the learner know that electrical energy is produced? (1)

11.3 Explain how this generator is able to produce electrical current when there is no electrical connection between the rotating magnet and the copper coil. (3)

11.4 List TWO changes that can be made to the generator to INCREASE the BRIGHTNESS of the globe. (2)

A generator (dynamo) used to power a light on a bicycle needs an average power of 6 W and a potential difference of 12 Vrms .

11.5 Calculate the maximum current that can flow through the globe. (4)

QUESTION 10 DBE JUNE 2015

10.1 The output potential difference of an AC generator is 100 V at 20 Hz. A simplified diagram of the generator is shown below. The direction of the current in the coil is from **a** to **b**.

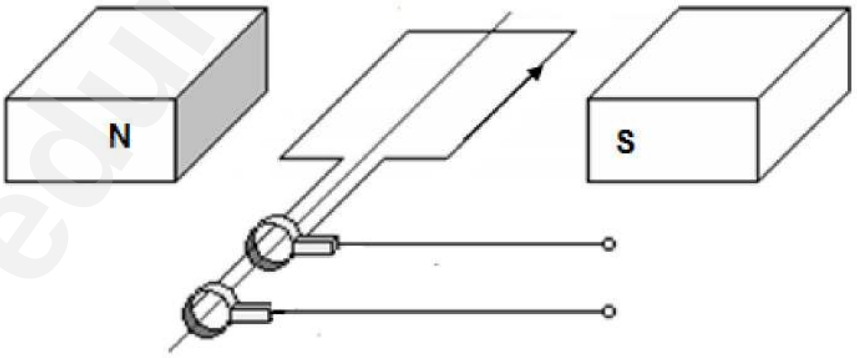

10.1.1 In which direction is the coil rotating? Write only CLOCKWISE or ANTICLOCKWISE. (1)

10.1.2 Starting from the position shown in the diagram, sketch a graph of the output potential difference versus time when the coil completes TWO (3)

Downloaded from eduresourceza.com

Downloaded from eduresourceza.com

full cycles. On the graph, clearly indicate the maximum potential

10.1.3 State ONE way in which this AC generator can be used to produce (1)
a lower output potential difference.

10.2 An electrical device is rated 220 V, 1 500 W.

10.3 Calculate the maximum current output for the device when it is connected to a 220 V alternating current source. (5)

QUESTION 10 DBE FEB/MAR 2016

10.1 A simplified sketch of an AC generator is shown below.
The coil of the generator rotates clockwise between the pole pieces of two magnets. At a particular instant, the current in the segment **PQ** has the direction shown above.

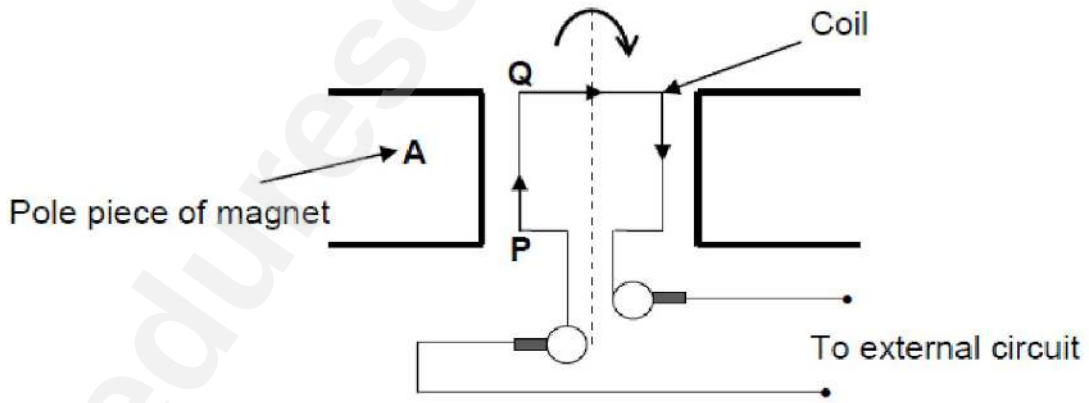

10.1.1 Identify the magnetic pole A. (
Only write NORTH POLE or SOUTH POLE.

10.1.2 The coil is rotated through 180°. (
Will the direction of the current in segment **PQ** be from **P** to **Q** or **Q** to **P**?

10.2 An electrical device is connected to a generator which produces difference of 220 V. The maximum current passing through the device 8 A.

Downloaded from eduresourceza.com

Downloaded from eduresourceza.com

Calculate the:

10.2.1 Resistance of the device (5)

10.2.2 Energy the device consumes in two hours (5)

Downloaded from eduresourceza.com

Downloaded from eduresourceza.com

CHEMICAL CHANGE

Electrochemical cells are based on Redox reactions; therefore they can't be dealt with without considering the core of their existence.

REDOX REACTIONS

Redox reaction is defined as transfer of electrons. Then for any transfer there must be two sides; one side must be losing electrons (**donating**); whereas, the other side must be gaining electron. In addition to this loss of electrons leads to an increase in an oxidation number (charge); whereas gaining of electrons leads to the decrease of an oxidation number (charge).

Reduction and oxidation reactions are two concurrent reactions that are mothers of electrochemical cell. These reactions occur simultaneously at the same rate and that means there is a constant change in electrolyte concentration.

Components of any redox reaction are electrolyte and two electrodes. An anode that is being oxidized always shows a decrease in mass, whereas a cathode undergoing reduction always shows an increase in mass. Whereby electrolyte is the solution that is able to conduct electricity and electrode are parts that house the redox chemistry.

Reduction reaction

Reduction reaction is defined as gaining of electrons, of which consequentially leads to a decrease in an **oxidation number**. Hence, the term **reduction** was derived from that occurrence. An element that undergoes reduction facilitates the loss of electrons of another element therefore it's called an **oxidizing agent**.

This half reaction is located at an electrode called cathode.

Then reduction reaction is written as follows:

$M^{2+} + 2e^{-} \rightarrow M$

Also, if there is an uncertainty of whether the reaction is reduction or not, one must look for the change in charge from reactants to products, if it decreases then that is reduction reaction.

Oxidation reaction

Oxidation reaction is defined as losing of electrons, of which consequentially leads to an increase in an **oxidation number**. Hence, the term oxidation was derived from that occurrence. Historically it was believed that oxidation is only possible in the presence of oxygen. However, later research showed that anything which causes the increase of

Downloaded from eduresourceza.com

Downloaded from eduresourceza.com

elemental oxidation number is oxidation. An element that undergoes reduction facilitates

reaction is located at an electrode called Anode. Then oxidation half reaction is written as follows:

$M \rightarrow M^{2+} + 2e^-$

Also if there is an uncertainty of whether the reaction is reduction or not, one must look for the change in charge from reactants to products, if it increases then that is oxidation reaction.

There are two type electrochemical cells

1. Galvanic / Voltaic cell
2. Electrolytic Cell

Galvanic Cell

Galvanic cell is an electrochemical cell that converts chemical energy into electrical energy. This cell must be spontaneous which could be observed by a positive E^o_{cell} being positive. Also it's made up of the following major components: salt bridge, conducting wire, and voltmeter. Salt bridge connects a chamber with a cathode with the one that has an anode. Salt bridge is made up of very stable salt usually KNO_3.

1. The salt bridge is used to:
    a. Complete the circuit
    b. Neutralises solutions by allowing the flow of ions in between solutions.
2. Conducting wire is used to transport electrons that are being transferred.
3. Voltmeter is used to measure the potential difference across the cell.

This cell uses the standard reduction potential tables to determine which substances shall undergo reduction as well as oxidation in a pair. The element with a smaller E value always undergoes oxidation. Which means it must be located on an ANODE which is a negative electrode for this cell. Whereas, an element with a bigger E value will always undergo reduction and that is located on the positive electrode called Cathode for this cell.

e.g. given the following pair Zn / Cu

E value for Zn is -0.76V

E value for Cu is +0.34V

Downloaded from eduresourceza.com

Downloaded from eduresourceza.com

When comparing both values its evident that Zn has a smaller value and that means in this

reaction.

Oxidation half reaction: $Zn \rightarrow Zn^{2+} + 2e^-$

Reduction half reaction: $Cu^{2+} + 2e^- \rightarrow Cu$

Also from the same set of elements the net reaction could be derived. A net reaction is the sum of both half reactions. Before the net reaction could be done there must be an equal amount of electrons for both equations. If they do not balance, they must be balanced before a net reaction is done.

Nett reaction: $Zn + Cu^{2+} \rightarrow Zn^{2+} + Cu$

Also the potential difference of the cell could be calculated based on the pair given. The potential difference is measured by the voltmeter; however, it could also be determined from the E values. Also the potential difference is independent of the number of electrons transferred, but depends upon the elements used in a cell.

$E_{cell} = E_{reduction} - E_{oxidation}$

$= (+0.34) - (-0.76)$

$= +1.10V$

Also this could show using cell notation which is a summary of a Galvanic Cell. In a cell notation anything with a charge must be accompanied by a standard concentration which is 1 $mol.dm^{-3}$. Also in a cell notation electrons transferred aren't shown however, the species of a substance are shown. The cell notation starts with an anode then double vertical lines that represent a salt bridge then a cathode

$Zn / Zn^{2+}(1\ mol.dm^{-3})\ II\ Cu^{2+}(1\ mol.dm^{-3}) / Cu$

The diagram below shows a standard Galvanic Cell.

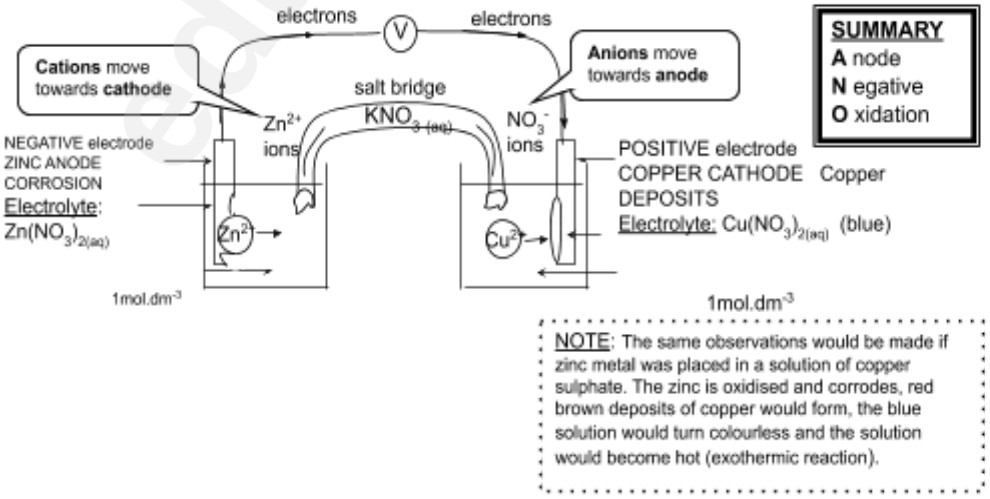

Downloaded from eduresourceza.com

Downloaded from eduresourceza.com

eduresourceza.com

Downloaded from eduresourceza.com

Downloaded from eduresourceza.com

STANDARD HYDROGEN ELECTRODE

- an inert platinum electrode to conduct electrons between the half cells
- a solution of H^+ ions of **concentration 1 mol.dm^{-3}** *eg. I mol.dm^{-3} HCl ; 0,5mol.dm^{-3} H_2SO_4*
- H_2 gas at a **pressure of 1 atmosphere** which is bubbled over the electrode
- The temperature of the half cell is kept at **25ºC**
- The half cell potential assigned to this electrode is **0,00V**

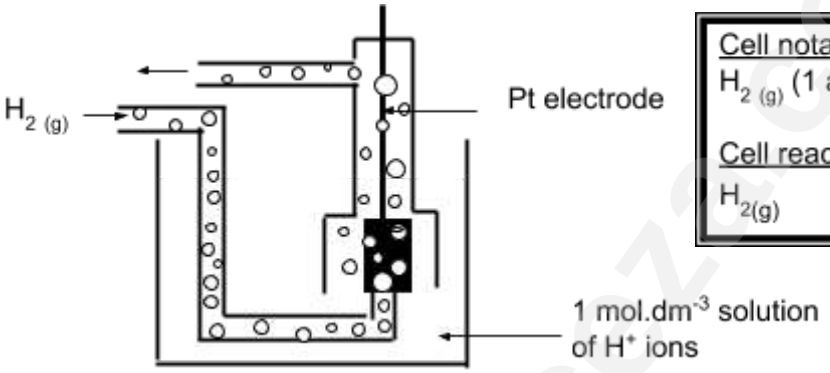

Cell notation:
$H_{2\,(g)}$ (1 atm), $Pt_{(s)}$ / $H_3O^+_{(aq)}$(I mol.dm^{-3})

Cell reaction:
$H_{2(g)}$ $2H^+_{(aq)}$ + $2e^-$

The standard electrode potential for a half cell reaction is the voltage measured under standard conditions when the half cell is connected to a standard hydrogen electrode to form a galvanic cell.

Using a zinc half cell connected to a hydrogen half cell we find that the voltmeter reads -0,76 V, thus E° for Zn/Zn^{2+} = - 0,76 V (the negative sign is given to the zinc half cell because when connected to the hydrogen electrode, it will be the source of electrons). Using a copper half-cell connected to the hydrogen electrode the value of E° = + 0,34 V.

Relationship of current and potential to rate, equilibrium and E° values

- The faster the reaction rate the greater the current i.e. the rate of flow of charge (current) will increase when the reaction rate increases.
- The E° values used to calculate cell potential are measured at standard conditions.
- As the cell reaction progresses the concentration of reactant ions decreases and product ions increases causing the **cell potential** to decrease until it **reaches zero**. At this point the **cell reaction is in equilibrium** and there is no nett change in the amount of ions in the system so no electrons flow from anode to cathode. **The cell is flat.**
- The larger the E° value the further the reaction is from equilibrium.
- Since the cell reaction is a reversible process changes in the reaction conditions can shift the equilibrium position.

Downloaded from eduresourceza.com

Downloaded from eduresourceza.com

- If a change is made which **favours the forward reaction** then the **emf of the**

- If a change is made that **favours the reverse reaction** then the **emf of the cell will decrease** since electrons are transferred at a slower rate.

Example:

Anode: Zn □ Zn^{2+} + $2e^-$ (Oxidation half-reaction)

Cathode: Cu^{2+} + $2e^-$ □ Cu (Reduction half-reaction)

$Zn + Cu^{2+}(aq)$ □ $Zn^{2+}(aq) + Cu$

Note:

- If the reaction in a zinc / copper cell is approaching equilibrium (emf approaching zero) then Cu^{2+} ions could be added to the cathode half cell in order to favour the forward reaction and increase the emf of the cell.
- If Zn^{2+} ions are added to the zinc half cell then the zinc electrode will have less tendency to oxidise, i.e. reverse reaction favoured, therefore less electrons transferred and emf decreases.

NOTE:

Ions are added to a half cell by adding a soluble salt containing those ions, eg adding $Cu(NO_3)_2$ will add Cu^{2+} ions.

Worksheet on galvanic cells

*1 Consider a voltaic cell that is set up between **aluminium (Al) and lead (Pb)**.*

1.1 What metal will form the cathode of this cell?

1.2 Name a suitable electrolyte for the lead half-cell.

1.3 Which metal electrode will corrode during the operation of this cell?

1.4 Write the anode, cathode and nett reaction for this cell.

Anode

Cathode

Nett

1.5 Give the cell notation for this cell (include standard conditions).

1.6 Calculate the emf (E^o_{cell}) of this cell.

1.7 What will happen to the emf of this cell as the cell reaction approaches equilibrium?

Downloaded from eduresourceza.com

Downloaded from eduresourceza.com

1.8 How will the emf of the cell be affected if the concentration of Al^{3+} ions is increased

Electrolytic Cell

Electrolytic cell is an electrochemical cell whereby electrical energy is converted to chemical energy. This is because in the cell the process called electrolysis takes place. **Electrolysis** is breaking down of compounds using electricity. Also this is a non-spontaneous cell because it requires electrical energy before redox reactions could be observed. The electrical energy source for this cell must be DC supply. Being a DC supply means there will be polarisation of electrodes since a DC has a positive electrode and a negative electrode. In this regard an anode is always connected to a positive terminal and that influences its polarity thus becomes a positive electrode; and this is in contrast with a Galvanic cell. Furthermore a cathode is always connected to a negative terminal; thus its polarity becomes negative. There are few type of electrolytic cells; however, for chemical change will only discuss Electroplating, electro-refining and aluminium extraction.

Electro-plating

Electro-plating is the process whereby material that corrodes easily is coated with material does not corrode easily. Then the reason behind this is to mix useful properties from different substances to meet the needs of people. For example iron is a strong greyish metal which can be used to make artefacts like spoon; however, iron has a dull colour which is not so attractive also it is susceptible to oxidation by atmosphere. Therefore one might decide to coat it with Silver which provides the silver and attractive colour. Also it will not be available for oxidation in air because it's now covered with silver. The metals that are used for electroplating are unreactive (inert) metals like Ag, Cr, Au, Sn to name the few. In any electroplating an anode and electrolyte are made up of the same metal then an artefact to be coated is always a cathode. As the processes is continuing the artefact being coated changes colour to the colour of the metal used for coating. In this cell both oxidation and reduction is from only one metal.

Downloaded from eduresourceza.com

Downloaded from eduresourceza.com

The diagram below shows a simple electroplating cell

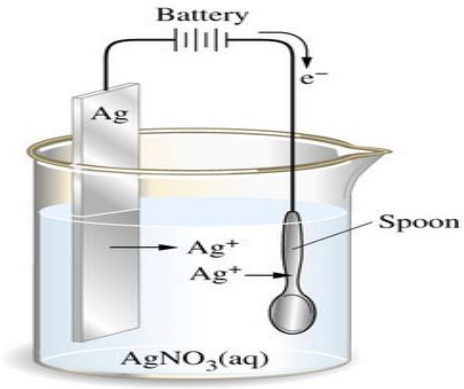

Anode: Ag □ Ag^+ + e^- (silver metal is oxidised to Ag^+ ions ∴anode corrodes)
Cathode: Ag^+ + e^- □ Ag (silver ions are reduced to silver metal which deposits on spoon)

NOTE: The concentration of the electrolyte remains the same during electroplating process.

Electro-refining

Electro-refining is the process whereby metals are purified from their ores. An ore (impure metal) is mined composite of other atoms bonded with a metal of interest. Then electro-refining is used to extract that metal from others. In this cell both electrodes i.e. pure and impure electrodes and an electrolyte they are made up of the same metal (Cu). However, one of these electrodes is an ore (impure). In electro-refining an impure electrode is always an anode then a pure electrode is always a cathode.

Diagram below shows a simplified Cu purification cell.

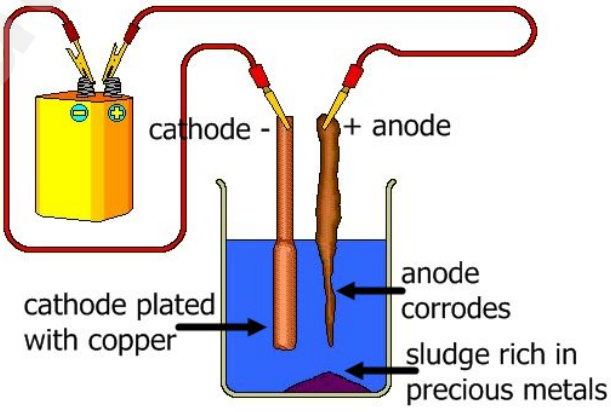

Anode (impure copper): Cu □ Cu^{2+} + $2e^-$

Downloaded from eduresourceza.com

Downloaded from eduresourceza.com

Cathode (pure copper): $Cu^{2+} + 2e^- \rightarrow Cu$

reduction potentials, E°, than copper) and sink to the bottom with other impurities where they form sludge.

Purification of Copper

Select *purification of copper* from the drop down menu on the left.

1 Select *dissolving the impure copper* from the drop down menu on the right and press the arrow (top right) to play the animation.

1.1 What name is given to this electrode?

1.2 What process is taking place at this electrode?

1.3 Write a half reaction to represent what is happening to the copper metal atoms at this electrode.

1.4 Why does this electrode appear to be smaller at the end of the process?

1.5 Why are the iron (Fe) atoms oxidised but not the silver (Ag) and gold (Au) atoms?

2 Select *pure copper forming* from the drop down menu on the right and press the arrow (top right) to play the animation.

2.1 What name is given to this electrode?

2.2 What process is taking place at this electrode?

2.3 Write a half reaction to represent what is happening to the copper metal atoms at this electrode.

2.4 Why does this electrode appear to be larger at the end of the process?

Downloaded from eduresourceza.com

Downloaded from eduresourceza.com

THE CHLOR-ALKALI INDUSTRY

The overall reaction is:

$2NaC\ell\,(aq) + 2H_2O(\ell) \rightarrow C\ell_2(g) + H_2(g) + 2NaOH(aq)$

There are three different cells:

- Mercury cell
- Diaphragm cell
- Membrane cell

The mercury cell uses the least energy of the three cells but it has the lowest yield of chlorine. Mercury is also harmful to the environment.

The diaphragm cell produces a dilute sodium hydroxide solution and it uses an asbestos diaphragm, which is also harmful to the environment.

The membrane cell: LEARN WELL!!!

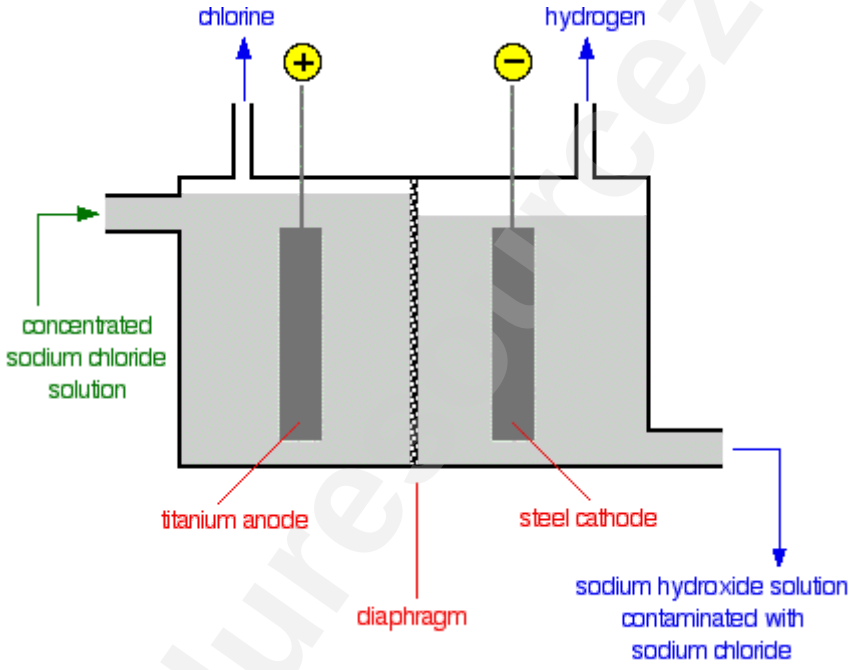

The membrane used is a polymer, which is quite expensive to make but it has no harmful environmental issues. This method produces very pure sodium hydroxide.

NITROGEN GAS

Nitrogen occurs naturally in the atmosphere. It forms 78% of the air. Pure nitrogen is obtained by from the fractional distillation of liquid air.

HYDROGEN GAS

Downloaded from eduresourceza.com

Downloaded from eduresourceza.com

Hydrogen gas is produced at Sasol from steam and coal by the process of gasification.

Aluminium Extraction

Aluminium is mine as an ore called Bauxite which is washed by NaOH to produce alumina (Al_2O_3) and mostly Fe_2O_3 which is known as read mud. Then aluminium has to be separated from oxygen during extraction. The bauxite has to be made molten before it can start conducting electricity. However, Al_2O_3 melts at 2050°C which requires a lot of energy that is generated from electricity. These temperatures consume lot of energy and that may lead to less profit being obtained. Therefore, alumina is dissolved is cryolite (Na_3AlF_6) which reduces the melting point temperature of alumina to 900 – 1000 °C. This invention is cost effective because the amount of electricity used is reduced by more than half. Also this help in reduction of CO_2 on electricity production of which it's also an environmental saving measure. Since CO_2 is a greenhouse gas. The aluminium extraction cell uses carbon electrodes (both anode and Cathode). After alumina has been electrolyzed it produces Al^{3+} and O^{2-}; of which Al^{3+} is attracted by a negative electrode which is a cathode and it undergoes reduction there. Whereas O^{2-} is attracted by a positive electrode which is an anode and it get oxidized there. The reactions occurring in this cell are as follows:

Anode: $2O^{2-} \rightarrow O_2 + 4e^-$

Cathode: $Al^{3+} + 3e^- \rightarrow Al$

Nett: $4Al^{3+} + 6O^{2-} \rightarrow 4Al + 3O_2$

However the production of O_2 at the Carbon anode may lead to a side reaction which reduces the size of this electrode.

That side reaction $C + O_2 \rightarrow CO_2$. This CO_2 re-joins the environment. Therefore, after sometime anode may need to be replaced.

The diagram below shows the simple representation of aluminium extraction cell.

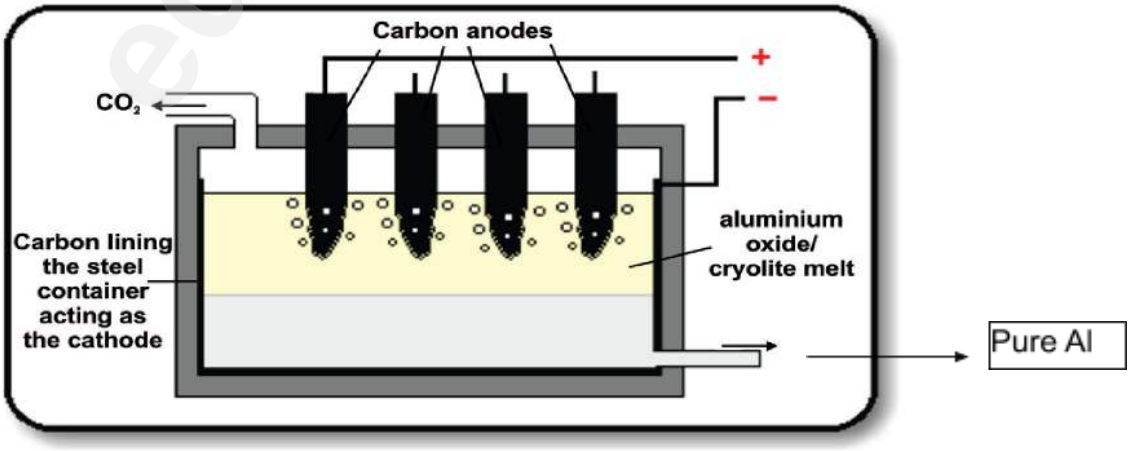

Downloaded from eduresourceza.com

Downloaded from eduresourceza.com

SUMMARY OF ELECTROLYTIC CELL VS VOLTAIC (GALVANIC) CELL

	ELECTROLYTIC	VOLTAIC (GALVANIC)
Appearance of simple form of cell	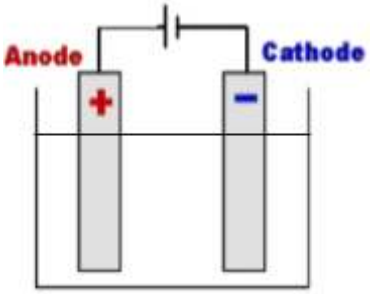 ● Must have cell or battery in external circuit to supply electrical energy. ● Consists of 2 electrodes in the SAME solution.	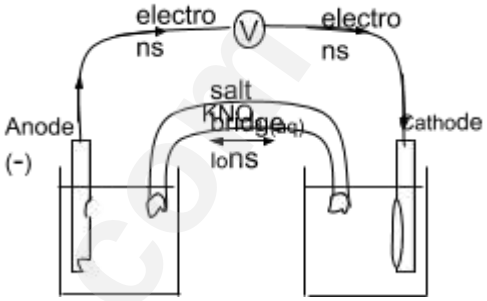 ● No external source of electricity i.e. there will be no cell or battery shown in the external circuit. ● It consists of two half cells containing different electrodes each of which is in a solution of its salt. The solutions in each half cell are DIFFERENT. ● There must either be a salt bridge or some sort of porous membrane separating the two half cell to allow for the passage of ions between cells.
Energy conversion	Electrical to chemical	Chemical to electrical
Polarity of electrodes	Anode = positive Cathode = negative	Anode = negative Cathode = positive
Uses	Extraction of aluminium; purification of copper; electroplating; chlor-alkali process – electrolysis of brine to form chlorine, sodium hydroxide and hydrogen	Batteries ● Primary – zinc-carbon; lithium; mercury (not rechargeable) ● Secondary – lead-acid accumulator or car battery (rechargeable)

Downloaded from eduresourceza.com

Downloaded from eduresourceza.com

QUESTION 1: ***DBE Exemplar 2014***

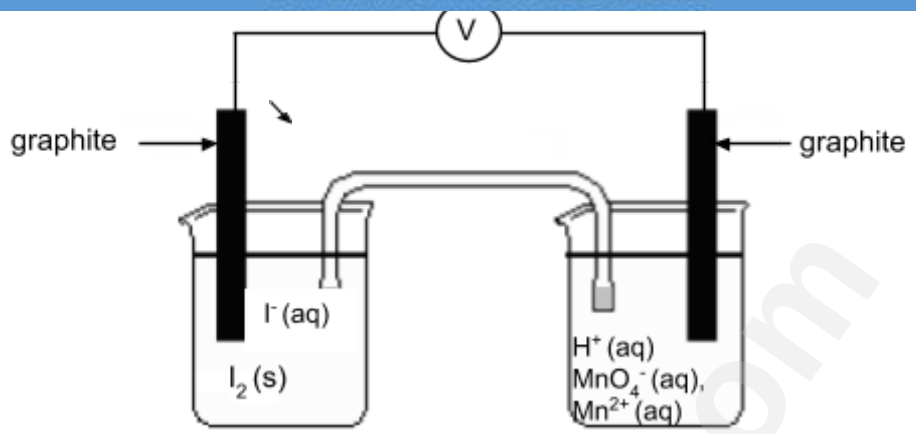

1.1 Write down the concentration of H^+(aq) in the one half-cell. (1)

1.2 Solids present in half-cells are usually used as electrodes. Give a reason why I_2(s) is not suitable to be used as an electrode. (1)

1.3 Write down TWO properties of graphite, other than being a solid, that makes it suitable for use as electrodes in the above voltaic cell. (2)

1.4 For the above voltaic cell, write down the :

1.4.1 NAME of the oxidizing agent.

(1)

1.4.2 Net cell reaction

(3)

1.4.3 Cell notation

(3)

1.5 Calculate the cell potential of the above cell.

(4)

1.6 How will the reading on the voltmeter be affected if the concentration of MnO_4^- decreases? Only write down INCREASES, DECREASES or NO EFFECT. (1)

Downloaded from eduresourceza.com

Downloaded from eduresourceza.com

the surface of the metal.

SIGNIFICANCE OF THE PHOTOELECTRIC EFFECT

It establishes the quantum theory and it illustrates the **particle nature of light.**

INTERACTION BETWEEN LIGHT AND MATERIALS

When light strikes or any electromagnetic radiation strikes the surface of an object, light or the electromagnetic radiation can be absorbed, reflected, transmitted or any combination of these effects. **Light is energy**, and when it strikes a metal, this energy is transferred to the electrons in the atoms. The amount of energy that is transferred depends on the material. Since the energy levels in metals are close together, almost all frequencies of light can be absorbed, exciting electrons into higher available energy levels.

When the frequency of the light is different to the natural energies of the electrons in the atom material, the light passes through and is therefore transmitted. In non-metals such as insulators, **energy gaps** between conduction bands and the valence bands are very large. So for an electron to move into the empty energy level in the conduction band requires a lot of energy. When light is **absorbed,** the **greatest** transfer of energy takes place. When light is **scattered**, very **little energy** transfer takes place. The absorbed energy is converted into internal energy, making the object hot. If no light is reflected or transmitted, the object will appear black. The colour of an object is determined by the **frequency** of the light it transmits.

THRESHOLD FREQUENCY OR CUT –OFF FREQUENCY

Only light of sufficiently high frequency can **eject electrons** from a metal plate. This minimum frequency required to eject the photoelectrons off the surface of a metal is called **threshold** or **cut off frequency (f_o).**

Increasing the intensity of the ultraviolet light causes more electrons to be ejected per second.

From the equation, **E = hf** where E is the amount of energy in J, h is Planck's constant = $6{,}63 \times 10^{-34}$ J•s and f is the frequency of the incoming light in Hz.

WORK FUNCTION (W_o)

Energy is needed to remove an electron from a metal. For any metal, a minimum amount of energy, called the **work function (W_o)** is needed to remove an electron from the surface

Downloaded from eduresourceza.com

Downloaded from eduresourceza.com

of a metal. The energy of the photon must be equal to or greater than the work function of

The equation is:

$\mathbf{W_o = hf_o}$

Where

W_o is work function in Joules (J),

h is Planck's constant= 6,63 x 10^{-34} J•s

f_o is the threshold frequency in Hertz (Hz).

The maximum kinetic energy of the ejected electrons can also be determined where

$$\mathbf{K_{max} = E - W_o}$$

Thus, $\mathbf{E = W_o + K_{max}}$

Where is the energy of the incoming light and can be determined from

E = hf and W_o is the work function of the metal and can be determined from $W_o = hf_o$.

The speed of the emitted electron or photoelectron can then be determined from K_{max} = ½mv^2 where m is the mass of the electron which is given on the Data Sheet.

Thus, the equation can now become:

$\mathbf{hf = W_o + ½\ mv^2}$

Graphical Interpretation in Photoelectric Effect

- A change in the intensity of light **does not** affect the **maximum kinetic energy**. A graph of maximum kinetic energy against intensity is a simple horizontal line.
- A graph of maximum kinetic energy against frequency is a straight line with a positive gradient and a negative intercept on the *y* axis. The graph matches a relationship of the general form $y = mx + c$, where, in this case, *y* is the maximum kinetic energy and *x* is the frequency.
- The value of the gradient *m* is found by experiment to be 6.6×10^{-34} J s, and the value of the intercept when the metal is sodium is found to be -3.6×10^{-19}J.
- Thus for sodium: $E_{k\,max} = 6.6 \times 10^{-34}f - 3.6 \times 10^{-19}$J.
- The graph of maximum kinetic energy against frequency passes through the *x* axis at the lowest frequency at which the emission of electrons can take place. This frequency is called **threshold frequency**.

Downloaded from eduresourceza.com

Downloaded from eduresourceza.com

DUAL NATURE OF LIGHT

The photoelectric effect demonstrates the particle nature of light.

EMISSION AND ABSORPTION SPECTRA

There are three different types of spectra:

- Continuous emission spectra
- Line emission spectrum
- Line absorption spectrum

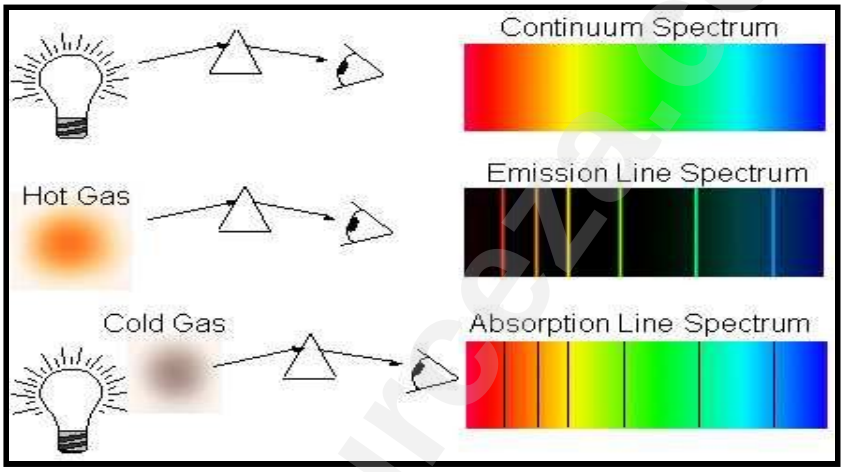

An electron may absorb energy and it can now move up one or more energy levels inside the atom. The electron is said to be **"excited".** When this electron returns to its ground state, a photon of energy is released. If the involved atoms in the discharge tube emit photons having only certain specific energies, it implies that the internal energy of the atom will only **increase or decrease** in steps, or that the internal energy of an atom is distinctive by certain discreet energy levels. If an electrons gains internal energy, the electron jumps between **energy levels**. When an electron loses internal energy, it emits energy as a photon that contains energy.

$\mathbf{E = E_2 - E_1}$

Where, E is the energy of the photon $E_2 - E_1$ is the total internal energy between two energy levels which energy jump took place.

An atomic absorption spectrum is formed when certain frequencies of electro - magnetic radiation that passes through a medium e.g. a cold gas is absorbed.

Downloaded from eduresourceza.com

Downloaded from eduresourceza.com

An atomic emission spectrum is formed when certain frequencies of electromagnetic

state to a lower energy state.

QUESTION 1 (DBE November 2015)

In an experiment to demonstrate the photoelectric effect, light of different wavelengths was shone onto a metal surface of a photoelectric cell. The maximum kinetic energy of the emitted electrons was determined for the various wavelengths and recorded in the table below.

INVERSE OF WAVELENGTH $\frac{1}{\lambda}$ ($\times 10^{6}$ m^{-1})	MAXIMUM KINETIC ENERGY $E_{k(max)}$ ($\times 10^{-19}$ J)
5,00	6,60
3,30	3,30
2,50	1,70
2,00	0,70

1.1. What is meant by the term photoelectric effect? (2)

1.2. Draw a graph of $E_{k(max)}$(y-axis) versus $1/\lambda$ (x-axis) (3)

1.3. USE THE GRAPH to determine:

1.3.1 The threshold frequency of the metal in the photoelectric cell. (4)

1.3.2 Planck's constant. (4)

QUESTION 2 (ieb Hilton College Trial 2012)

A metal plate is illuminated with an ultra violet radiation of frequency 1.67×10^{15} Hz. The maximum kinetic energy of the liberated electrons is 3.0×10^{-19} J.

2.1 Calculate the energy of one photon. (3)

2.2 Calculate the work function of the metal. What does this number represent? (4)

2.3 The radiation is maintained at the same frequency, but the intensity is doubled. State and explain what changes, if any, occur to the number of electrons released per second and the maximum kinetic energy of these electrons. (4)

Downloaded from eduresourceza.com

Downloaded from eduresourceza.com

QUESTION 3 (ieb November 2012)

Electromagnetic radiation of varying frequency is shone on the sodium metal cathode of a photocell. The maximum kinetic energy of the photoelectrons emitted is recorded.

Table to show how the maximum kinetic energy (E_k) of a photoelectron emitted from sodium metal varies with the frequency (f) of the electromagnetic radiation.

Frequency (x 10^{14} Hz)	Maximum kinetic energy (eV)
7	0,59
8	1,00
9	1,42
10	1,83
11	2,24

3.1 Plot a graph of maximum kinetic energy versus frequency as represented by these results for sodium metal. Use the GRAPH PAPER PROVIDED on your Answer Sheet. The scale on the y-axis has been marked for you. You must fill in your own scale for the x-axis which must start at ZERO.

(6)

3.2. Define *threshold frequency.*

(2)

3.3. Read off the threshold frequency for sodium metal from the graph.

(2)

3.4. If the maximum kinetic energy of the photoelectrons emitted is 2,0 eV then determine:

3.4.1. The **frequency** of the radiation incident on the sodium metal cathode.

(1)

3.4.2. The **wavelength** of the radiation incident on the sodium metal cathode.

(3)

3.4.3. The **energy** of the radiation incident on the sodium metal cathode (in joules)

(3)

3.5. State and explain how the graph would change (if at all) when the intensity of the light is increased for each of the frequencies used.

(3)

Downloaded from eduresourceza.com

Downloaded from eduresourceza.com

3.6. The magnitude of the value given by the **y-intercept is equal to the work function**

3.6.1. Extend your graph backwards to cut the y-axis and hence state the work function of the metal (in eV).

(1)

3.6.2. Convert your answer to Question 7.6.1 to joules.

(1)

3.6.3. Use the photoelectric effect equation, $\mathbf{E = W_f + \frac{1}{2} mv^2}$, to explain why the y-intercept is equal to the work function (W_f).

(3)

Downloaded from eduresourceza.com

Downloaded from eduresourceza.com

QUESTION 4(Ieb November 2015)

leaf is deflected due to like charges repelling each other.

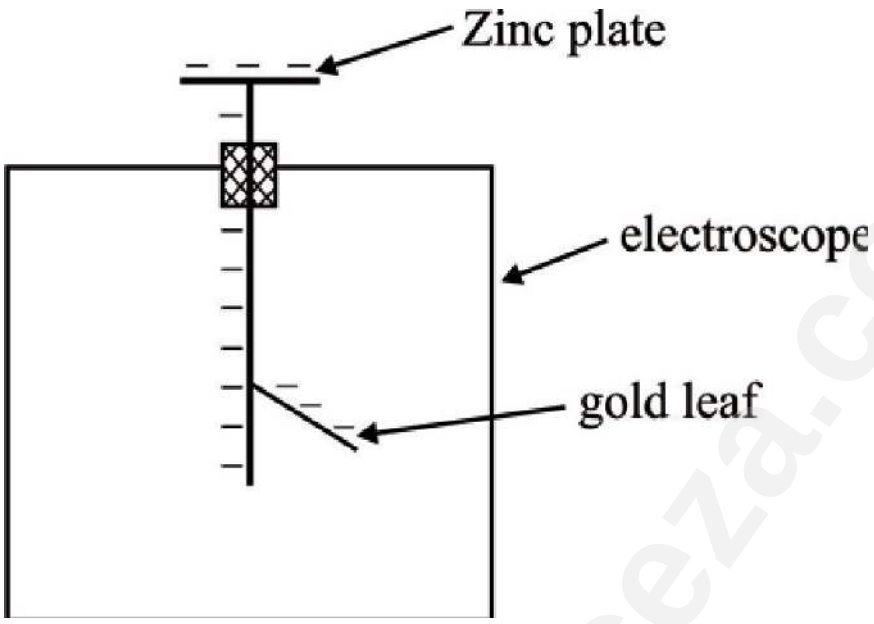

When visible light is shone on the plate, nothing is observed. When ultraviolet light is shone on the negatively charged electroscope, the gold leaf collapses.

4.1.1 Name the phenomenon described.

(2)

4.1.2 Explain why visible light has no effect while the ultra-violet light collapses the gold leaf.

(3)

4.2. The work-function of caesium is $3{,}36 \times 10^{-19}$ J.

4.2.1. Define *work-function*.

(2)

4.2.2. Calculate the lowest frequency photon that can eject an electron from caesium.

(3)

4.2.3. Calculate the maximum kinetic energy of an electron ejected from caesium by a photon of wavelength 400 nm.

(4)

Downloaded from eduresourceza.com

Downloaded from eduresourceza.com

eduresourceza.com

Downloaded from eduresourceza.com

Downloaded from eduresourceza.com

QUESTION 5 (ieb November 2015)

kinetic energy of the emitted electrons was determined and recorded in a table:

λ (nm)	E_K (× 10^{-19} J)	1/λ (× 10^5 m^{-1})
200	6.72	5.00
300	3.30	3.33
400	1.68	2.50
500	0.66	2.00
600	0.05	1.67

5.1. Plot a graph of 1/λ (x axis) against EK (y axis). (7)

5.2. The photoelectric equation is

$$\frac{hc}{\lambda} = W_f + E_K$$

Rearrange this equation into a straight line form (appropriate for your graph), and use your graph to determine

5.2.1. The work function, W_0

(2)

5.2.2. Planck's constant, h

(3)

QUESTION 6

6.1. The graph below shows the relationship between the kinetic energy of the ejected photoelectrons and the frequency of the incident radiation.

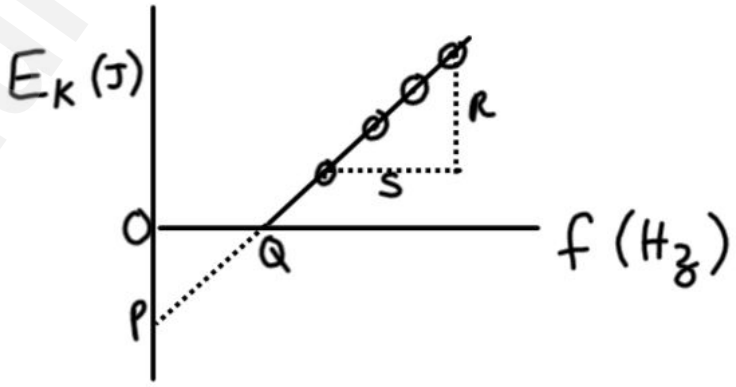

Downloaded from eduresourceza.com

Downloaded from eduresourceza.com

Which set correctly shows the information provided by P, Q, R and S?

	$\frac{R}{S}$	P	Q
	Planck's constant, h	Threshold frequency, f_0	Work function, W_0
B	Work function, W_0	E_K of electrons when f = 0	Threshold frequency, f_0
C	Threshold frequency, f_0	Work function, W_0	Planck's constant, h
D	Planck's constant, h	Negative of work function, $-W_0$	Threshold frequency, f_0

FERTILISERS

Definition: *Fertiliser*
A fertiliser is a chemical compound that is given to a plant to promote growth.

Fertilisers usually provide the three major plant nutrients (nitrogen, phosphorus and potassium). Fertilisers are in general applied to the soil so that the nutrients are absorbed by plants through their roots.

Nitrogen is needed by plants for proteins which make strong stems and healthy leaves, otherwise the leaves would turn yellow if there is a shortage of nitrogen.

Phosphorus help develop roots and conversion sun's energy into food for plants (during photosynthesis). It also help crops to ripen. A shortage of phosphorus in plants may lead to sickly plants with low quality fruit or flower. In nature, phosphorus is found in bone meal (a mixture of crushed and coarsely ground bones).

Potassium improves the quality of fruit and flowers. It is absorbed by plants as potassium chloride (KCl) and potassium chlorate ($KClO_3$). These salts also make the plants to survive frost and to resist diseases. Calcium is found from mined potassium salts (known as POTASH in fertilisers), such as KNO_3 and K_2SO_4 are used. It's also found from guano (the excrement of seabirds, cave-dwelling bats, seals or birds).

The three non-mineral nutrients (nutrients that are not obtained from the soil) are Carbon, Hydrogen and Oxygen and are available in the atmosphere as carbon dioxide (CO_2) and rain (H_2O).

Downloaded from eduresourceza.com

Downloaded from eduresourceza.com

eduresourceza.com

Downloaded from eduresourceza.com

Downloaded from eduresourceza.com

Definition : Organic and inorganic fertilisers

excretion.

Inorganic fertilisers are made from chemical processing of plants.

The NPK ratio

Fertiliser packaging contains a set of numbers. These numbers are called the **NPK ratio**, and they give the mass ratio of nitrogen, phosphorus and potassium in the fertiliser.

The NPK ratio expresses the content of each nutrient as a percentage of N, P and K in this order. A number in brackets after this ratio indicates the percentage by mass of N, P and K that is present in the fertiliser (what percentage of the total fertiliser is N, P and K?).

For example:

N	P	K	
3	1	5	(38)

38% of the total fertiliser is nitrogen, phosphorus or potassium.

% **N**: 3 in every 9 parts of the 38% contains nitrogen (N)

% **P**: 1 in every 9 parts of the 38% contains phosphorus (P)

% **K**: 5 in every 9 parts of the 38% contains potassium (K)

To calculate the percentage N, P or K in the fertilizer we use the following equation:

$$\% = \frac{\text{no. of parts of element}}{\text{sum of ratio}} \times \text{purity}$$

Example:
% N = $\frac{3}{9} \times 38\% = 12.67\%$

THE INDUSTRIAL MANUFACTURE OF FERTILISERS
In order to make fertilisers, we need to manufacture nitric acid, ammonia and sulphuric acid. All of these industrial processes make use of our understanding of equilibrium and rates.

<u>Producing Nitrogen (N_2)</u>

Air is made up of 78% nitrogen. It is separated from other gases in the air by a process called the fractional distillation of liquefied air.

Downloaded from eduresourceza.com

Downloaded from eduresourceza.com

Producing Hydrogen (H_2)

Hydrogen is produced at SASOL from coal / methane and steam to yield syngas. CO-H_2 mixture is separated via Fischer-Tropsch process. Process developed by **Franz Fischer** and **Hans Tropsch** in 1925. The coal is subjected to high temperatures and pressures and the gas produced contains high quantity of hydrogen and carbon monoxide which are then separated.

Producing Ammonia (NH_3)

Ammonia is produced by means of the Haber-Bosch process. This process is also governed by equilibrium principles.

THE HABER-BOSCH PROCESS

$$N_2(g) + 3H_2(g) \rightleftharpoons 2NH_3\,(g) \quad \text{(iron oxide catalyst)}\ \Delta H = -46\ kJ.mol^{-1}$$

Temperature

Lowering the temperature shifts the equilibrium to the right. However, lower temperature also slows the reaction down so an **optimum temperature** must be found (600 K - 800 K).

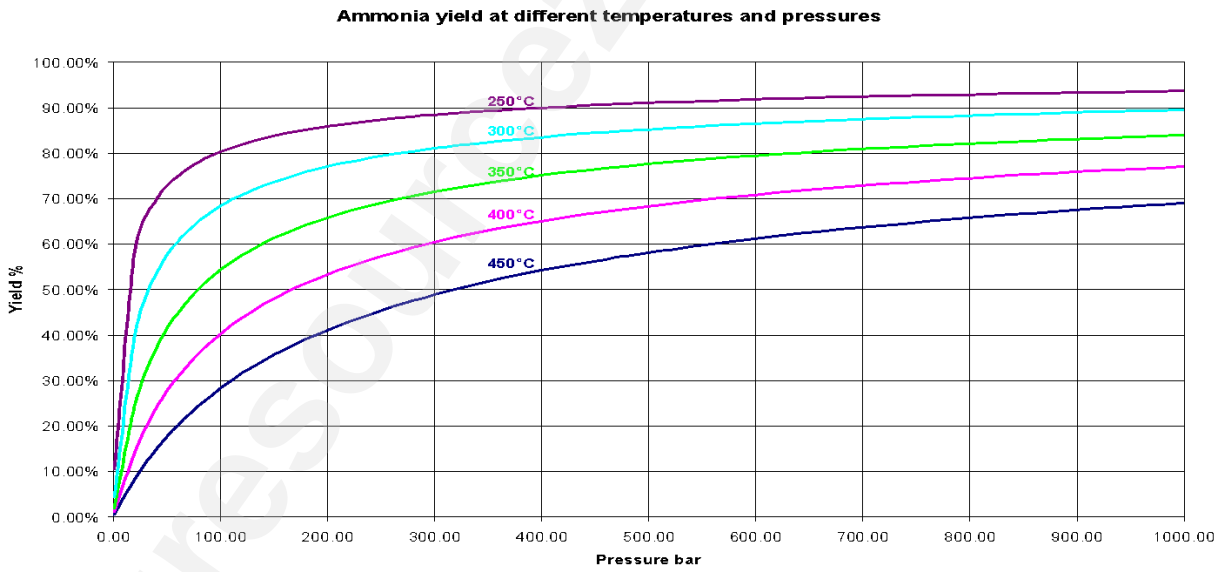

Pressure

High pressure favours the forward reaction (200 atm).

Concentration

Ammonia is continuously removed. This is done to reduce ammonia concentration and shift the equilibrium to the right.

Uses of Ammonia

- as a cleaning agent when dissolved in water.
- in the manufacture of fertilisers. Ammonium salts are highly soluble in water so they can be dissolved and absorbed by plants, thus making nitrogen available to the plant.
- in the manufacture of ammonium carbonate used in the textile industry.
- in the manufacture of nitric acid (HNO_3).

Downloaded from eduresourceza.com

Downloaded from eduresourceza.com

Producing Nitric Acid (HNO_3)

THE OSTWALD PROCESS

$4NH_3(g) + 5O_2(g) \rightarrow 4NO(g) + 6H_2O(g)$
$2NO(g) + O_2(g) \rightarrow 2NO_2(g)$

$4\ NO_2(g) + 2H_2O(g) + O_2(g) \rightarrow 4HNO_3(aq)$

- Ammonia is oxidised to nitrogen monoxide and water
- Nitrogen monoxide is further oxidised to nitrogen dioxide
- Nitrogen dioxide is then added to water from the first step and oxygen to make nitric acid.
- Nitrate salts are highly soluble in water and, therefore, assist in allowing nitrogen to be absorbed by plants

Producing Sulphuric Acid (H_2SO_4)

Sulphuric acid is produced in industry by the Contact Process. The Contact Process is made up of four steps:

THE CONTACT PROCESS

$S(s) + O_2\ (g) \rightarrow SO_2\ (g)$ 1
$SO_2(g) + O_2\ (g) \rightleftharpoons 2SO_3\ (g)$ (V_2O_5 catalyst), $\Delta H<0$ 2
$SO_3(g) + H_2SO_4 \rightarrow H_2S_2O_7$ 3
$H_2S_2O_7 + H_2O \rightarrow 2H_2SO_4$ 4

NOTE : SO_3 formed in step 2 is not added to water because the reaction is highly exothermic and produces a mist or smog.

- Sulphur is burnt in oxygen.
- Sulphur dioxide is further reacted with oxygen in contact with a vanadium pentoxide catalyst to form sulphur trioxide. **This is a reaction that is governed by equilibrium principles**.
- Sulphur trioxide is then added to sulphuric acid (note only 1 molecule) to form pyrosulphuric acid/fuming sulphuric acid/oleum.
- Pyrosulphuric acid is mixed with water and sulphuric acid is formed (note 2 molecules). One molecule of sulphuric acid is **'invested'** to make two molecules.

Temperature

Exothermic reaction. Lowering the temperature shifts the equilibrium to the right. However, lower temperature also slows the reaction down so an optimum temperature must be found (723 K).

Pressure

High pressure favours the forward reaction. (1 atm is good enough without unnecessary high cost for high pressure reaction vessels)

Downloaded from eduresourceza.com

Downloaded from eduresourceza.com

Sulphur(VI)oxide is continuously removed, to reduce concentration and shift the equilibrium to the right. The sulphur(VI)oxide is dissolved in water to form sulphuric acid (however, this reaction is highly exothermic, as mentioned above).

Uses of Sulphuric Acid

- acts as a drying agent – used by chemical engineers to mop up water.
- used as an electrolyte in car batteries (lead accumulator batteries).
- used in the recovery of metals such as uranium and copper.
- used to clean metal surfaces.
- used to produce fertilisers.

Producing Ammonium Nitrate

Nitric acid and ammonia can react together in an acid-base process to form the salt, ammonium nitrate (NH_4NO_3). Ammonium nitrate is soluble in water and is often used in fertilisers. The reaction is as follows:

$NH_3(g)+HNO_3(\ell) \rightarrow NH_4NO_3(s)$

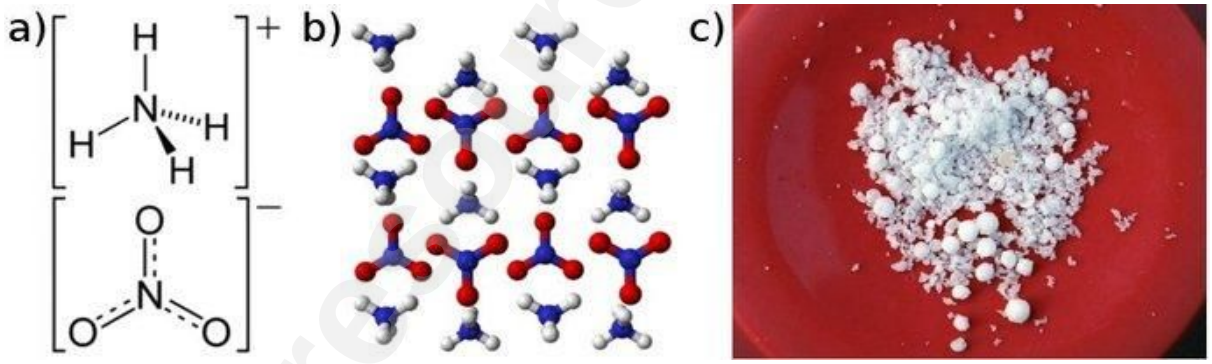

Producing Ammonium Sulphate ($(NH_4)_2SO_4$)

Ammonium sulphate ($(NH_4)_2SO_4$) can be produced industrially through a number of processes, one of which is the reaction of ammonia with sulfuric acid to produce a solution of ammonium sulphate according to the acid-base reaction below:

$2NH_3(g)+H_2SO_4(\ell) \rightleftharpoons (NH_4)_2SO_4(s)$

The ammonium sulfate solution is concentrated by evaporating the water until ammonium sulfate crystals are formed.

Advantaged and Disadvantages of Inorganic Fertilisers

Advantages

- Inorganic fertilisers provide a more accurate control over their nutrient supply.

Downloaded from eduresourceza.com

Downloaded from eduresourceza.com

- They are supplied in a water-soluble form which ensures that they are easily

Disadvantages

- Inorganic fertilisers are costly to produce as high energy is involved in their production.
- Nutrients which are not taken up by plants, will either accumulate in the soil therefore **poisoning the soil**, or **leach into the ground water** where they will be washed away and accumulate in water sources like dams or underground rivers.

Eutrophication

- Extensive utilization of fertilizers leads to pollution of surface and ground water and eutrophication of lakes, dams and rivers. This is mainly due to fertilizer wash off.
- Eutrophication is caused by excess phosphates and nitrates in rivers, lakes and dams.
- Phosphates promote the growth of algae which cover the surface of the water and kill aquatic plants below.
- Bacteria decompose the dead aquatic life causing oxygen levels in the water drop to such a low level that aquatic animals suffocate and die.

PAST EXAM QUESTIONS

<u>Question 2</u> (ieb Hilton College Trial 2010)

In the Haber Process hydrogen gas obtained from the Chlor-Alkali Process is reacted with nitrogen gas to produce ammonia (NH_3). The ammonia gas produced in this process is used as the starting material in the Ostwald Process for the industrial preparation of nitric acid (HNO_3). The steps involved in these reactions are shown below.

Process	Reaction	Conditions
Haber Process	$N_2(g) + 3H_2(g)$ □ $2NH_3(g)$ $\Delta H < 0$	450 °C ; 200 atmospheres ; iron catalyst
Ostwald Process	$4NH_3(g) + 5O_2(g)$ □ $4NO(g) + 6H_2O(g)$ $\Delta H < 0$ $2NO(g) + O_2(g)$ □ $2NO_2(g)$ $\Delta H < 0$ $3NO_2(g) + H_2O(l)$ □ $2HNO_3(aq) + NO(g)$	1 000 °C ; platinum catalyst

2.1 Describe the type of reaction represented by the Haber Process.
(2)

2.2 State Le Chatelier's Principle.
(2)

2.3 When considering the effect of each of the following changes answer only ***increase, decrease or no effect.***

2.3.1 What effect does the use of an iron catalyst have on the yield of ammonia in the Haber Process?
(2)

Downloaded from eduresourceza.com

Downloaded from eduresourceza.com

2.3.2 What effect does increasing the temperature have on the yield of NO in

(2)

2.3.3 What effect does increasing the pressure have on the solubility of NO_2 in the last step of the Ostwald Process?
(2)

Downloaded from eduresourceza.com

Downloaded from eduresourceza.com

Graph to show the distribution of molecular energies at constant temperature

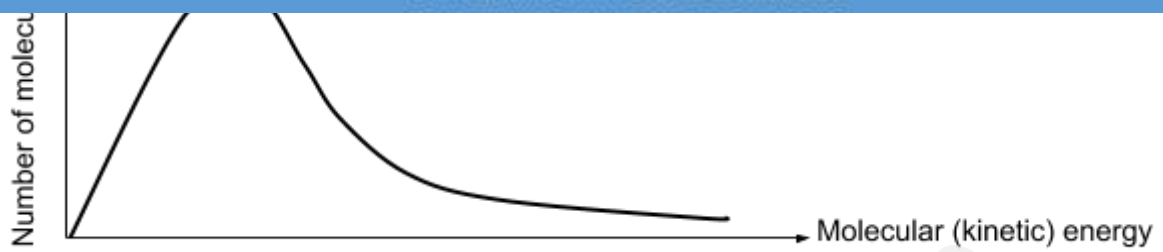

2.4 A platinum catalyst is used in the first step of the Ostwald Process. Copy the above graph into your answer book and use it to explain how the catalyst increases the rate of the reaction. Add suitable labels to your graph to assist in your explanation. (5)

2.5 How will the mass of the platinum catalyst change during the course of the reaction? Explain your answer. (2)

The Haber Process and the Ostwald Process provide important reactants for the manufacture of **nitrogenous fertilisers.** These processes were developed at the start of World War 1.

2.6 Use the information given on the label of the 2 kg box of fertiliser shown opposite to determine what percentage of the contents of the box is nitrogen containing compounds. (4)

2.7 Explain how fertilisers can lead to eutrophication of dams. (4)

Question 11 (DBE November 2013)

11.1) A farmer wants to produce the following fruit and vegetables for the market:

spinach; potatoes; apples.

11.1) Root growth of potato plants.
(1)
11.2) Leaf growth of spinach.
(1)

Downloaded from eduresourceza.com

Downloaded from eduresourceza.com

11.3) Flower and fruit production of apple trees

11.2) Ammonia must be produced in large quantities to produce nitrogen-based fertilisers.

11.2.1) Write down the name of the process used in the industrial preparation of ammonia. (1)

11.2.2) Write down a balanced chemical equation for the reaction that takes place in the process named in QUESTION 11.2.1. (3)

11.3) Ammonium hydrogen phosphate, $(NH_4)_2HPO_4$, is a type of fertiliser used in agriculture.

Refer to the type of elements of which this fertiliser is composed to give a reason why it will be advantageous for a farmer to use this fertiliser instead of a fertiliser such as ammonium nitrate, NH_4NO_3 . (2)

11.4) Describe ONE negative impact on humans when fertiliser runs off into dams and rivers as a result of rain. (2)

<u>Question 7</u> (IEB NOVEMBER 2009)

FERTILISER AND SULPHURIC ACID

The manufacture of sulphuric acid is a key industrial process. Sulphuric acid is used to make a huge number of other chemicals, including fertiliser. The process for manufacturing sulphuric acid is called the Contact Process. The flow diagram below represents the Contract process.

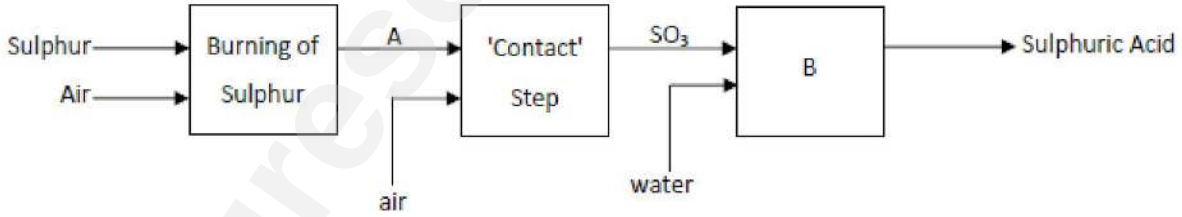

7.1) **Name** the product of the burning of sulphur (at A). (1)

7.2) The Contact step can be represented by the equation:

$$2SO_2(g) + O_2(g) \rightleftharpoons 2\ SO_3(g)\ \Delta H = -197\ kJ$$

Can the Contact step be considered to ever reach equilibrium in this non-closed system? (1)

7.4) The final stage of the Contact Process (Step B) actually consists of two steps. The first step is the addition of SO_3 to concentrated sulphuric acid. The second step is the addition of water to the product.

7.4.1) **Name** the product that forms when SO_3 is added to sulphuric acid. (2)

7.4.2) Why is SO_3 generally not added directly to water? (2)

7.5) The fertiliser superphosphate is made by treating calcium phosphate from rock with sulphuric acid. Calcium phosphate rock is found in North Africa where it is

Downloaded from eduresourceza.com

Downloaded from eduresourceza.com

cheap and freely available.

(3)

7.5.2) Write down the formulae of the products of the reaction.

(2)

7.5.3) Is calcium phosphate a mineral which is soluble in water?

(1)

7.6) Farmers have been using increasing amounts of inorganic fertiliser worldwide over the past 30 years.

7.6.1) Why do we need to use fertiliser for planting and growing crops? (2)

7.6.2) List two possible risks which farmers encounter when using inorganic fertiliser.

(2)

7.6.3) How should farmers manage these risks?

(2)

7.7) Many waterways in South Africa are threatened by eutrophication. Your teacher has given you the task of analysing some proposals to solve this problem. The key ideas are as follows:

Proposal 1: Ban inorganic fertiliser.

Proposal 2: Triple the cost of inorganic fertiliser by imposing a tax.

7.7.1) What is eutrophication?

(4)

7.7.2) What is the cause of eutrophication?

(2)

7.7.3) Consider how the banning of inorganic fertiliser would affect farmers' ability to produce food on a large scale and critically analyse how effective proposal 1 would be as a solution to the problem of eutrophication.

(4)

7.7.4) How might proposal 2 force farmers to reduce the impact of eutrophication and hence, critically analyse proposal 2 as a solution to the problem of eutrophication.

(4)

<u>Question 11</u> *(*DBE Feb/March 2009*)*

About one third of the protein by humans comes from fertilisers. The flow diagram below shows three industrial processes, A, B and C, that result in the production of fertilisers.

Downloaded from eduresourceza.com

Downloaded from eduresourceza.com

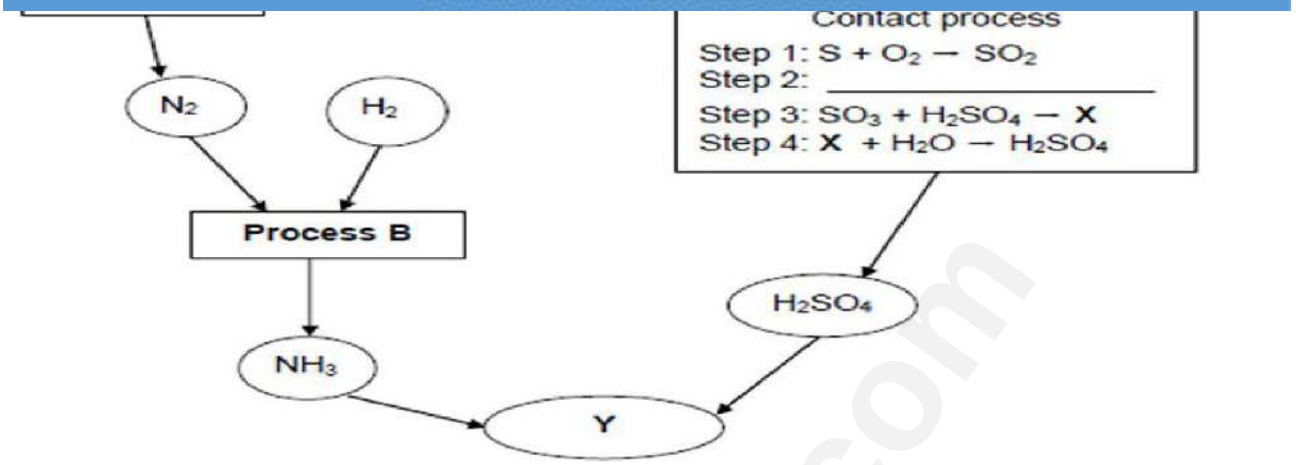

11.1)Write down the name of the Process A. (1)

11.2) Write down the balanced equation for the reaction which takes place in process B. (3)

11.3) Write down the balanced equation for step 2 of process C. (3)

11.4) Write down the formula and the name of product X in step 3 of process C. (2)

11.5) Write the formula and the name of the fertiliser represented by Y. (3)

11.6) Fertiliser prices increased by more than 200% since 2007. This rise is fuelled by new demand.

11.6.1) Give two reasons why there is a continuous demand for fertilisers. (2)

11.6.2) Give two reasons why there is an increase in the price of fertilisers. (2)

Downloaded from eduresourceza.com

Downloaded from eduresourceza.com

Question 12 *(*DBE Feb/March 2010*)*

A learner, who is revising for a test on fertilisers, summarises her notes as follows:

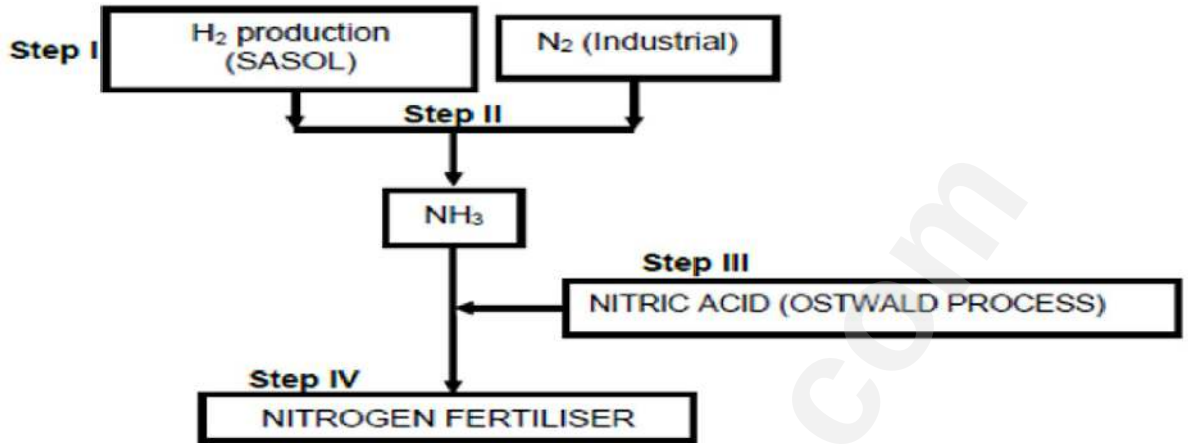

12.1) Write down the name of the industrial process in **Step I** used to extract nitrogen gas from the atmosphere. (1)

12.2) The Haber process, indicated in **Step II**, is represented by the following equation:

$$N_2 + 3H_2 \rightleftharpoons 2NH_3 \qquad \Delta H < 0$$

In this process, high temperatures of approximately 450°C are used. Explain in terms of reaction rate, equilibrium and temperature why such a high temperature, and not a lower temperature, is used.

Explain in terms of reaction rate, equilibrium and temperature why such a high temperature, and not a lower temperature, is used.
(4)

12.3) Write a balanced chemical equation for the reaction that produces the nitrogen fertiliser in **Step IV.**
(3)

12.4) The learner decides to educate the community about the possible negative effects of the overuse of nitrogen fertiliser on the environment.
Write down the main arguments that she will raise to convince the community to avoid excessive of nitrogen fertilisers.
(4)

12.5) The learner notes that fertilisers with a NPK ratio of 7:1:1 is needed for the growth of maize plants.

12.5.1) State what the term NPK ratio means.
(2)

12.5.2) Will the fertiliser with this NPK ratio lead to a good crop yield? Explain your answer.
(3)

Downloaded from eduresourceza.com

Downloaded from eduresourceza.com

Question 10 (FREE STATE SEPTEMBER 2015)

Different processes used in the preparation of fertiliser **C** are represented in the flow diagram below.

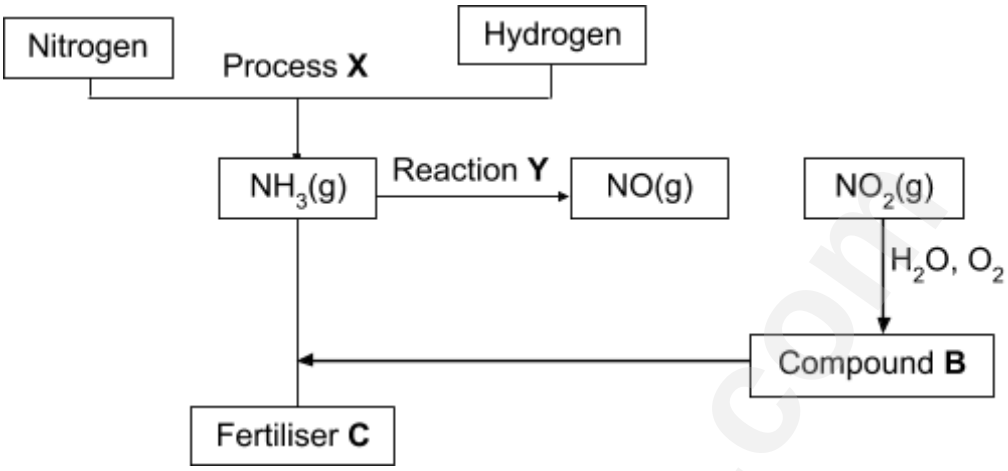

Use the above information and write down the:

10.1 NAME of the industrial preparation of nitrogen. (1)

10.2 NAME of process **X**. (1)

10.3 NAME of reaction **Y** (1)

10.4 NAME or FORMULA of compound **A**. (1)

10.5 Balanced equation for the preparation of compound **B** from $NO_2(g)$. (3)

10.6 Balanced equation for the preparation of fertiliser **C**. (3)

QUESTION 10 (GAUTENG SEPTEMBER 2015)

10.1) The diagram below illustrates the Haber process for the preparation of ammonia.

Downloaded from eduresourceza.com

Downloaded from eduresourceza.com

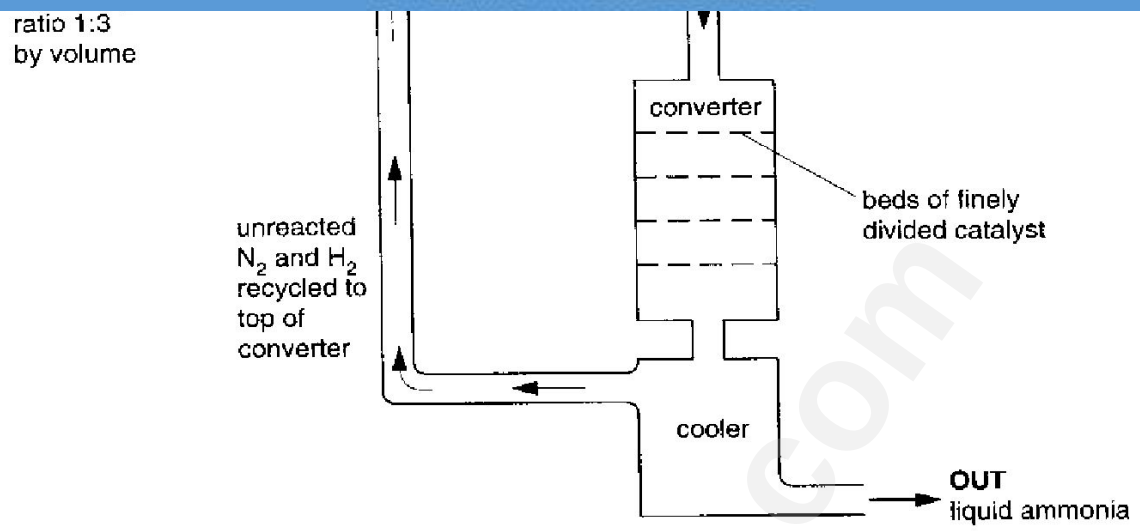

10.1.1) NAME the catalyst used in this process.
(1)

10.1.2) Using the COLLISION THEORY, explain why the FINELY DIVIDED catalyst will be more effective than a LARGE SOLID catalyst of the same mass.
(2)

10.1.3) Give ONE reason, other than cost, why the unreacted nitrogen and hydrogen are recycled.
(2)

10.2) A farmer adds calcium hydroxide, $Ca(OH)_2$, and ammonium sulphate, $(NH_4)_2SO_4$ alternately to the soil.

10.2.1) Explain the USE of EACH substance.
(2)

10.2.2) The following reaction can occur when these two substances react:

$$Ca(OH)_2(aq) + (NH_{4)2}SO_4(aq) \rightarrow CaSO_4(s) + 2\ NH_3(g) + 2H_2O(\ell)$$

Explain why the farmer should NOT add both substances at the same time. (1)

10.3) In one of the steps of the Ostwald process, the following reaction takes place,

$$4NO(g) + 2H_2O(\ell) + 3O_2(g) \rightarrow 4HNO_3(aq)$$

Calculate the maximum mass of nitric acid which can be made from 720 dm^3 of nitrogen(II)oxide (NO) at room temperature.
Assume that the molar gas volume at room temperature is 24 dm^3. (3)

References

1. ***GDE/Sci-Bono 2014 lesson plans***
2. ***Siyavula Leaners' books grade 11 and 12***
3. ***IEB past exam papers***

Downloaded from eduresourceza.com

Downloaded from eduresourceza.com

4. Basic education provincial past exams

JIT TERM 3: PHYSICAL SCIENCES

eduresourceza.com

Downloaded from eduresourceza.com