Total Marks

ST PETER'S COLLEGE

GRADE 12 PRELIMINARY EXAMINATION

PHYSICAL SCIENCES PAPER 1

4th AUGUST 2025

EXAMINER: Mr. N. Govender **Time:** 180 minutes

MODERATORS: Mr. M Pillay **Marks:** 200 Marks

STUDENT NAME: _____

Teacher:

Read the Following Instructions Carefully

1. This question paper consists of: A question paper of 37 pages and a Data sheet of 2 pages
2. Read the questions carefully.
3. Answer ALL the questions on the question paper and hand it in at the end of the examination. Remember to write your Name in the space provided.
4. Use the data and formulae whenever necessary.
5. Show all the necessary steps in calculations.
6. Where appropriate, give your answers to two decimal places.
7. It is in your interest to write legibly and to present your work neatly.
8. Two extra working-out pages and additional graph paper are added to this examination paper (pages 33-37). If you run out of space for a question, use these extra working-out pages. Clearly indicate the number of questions, should you use this extra space.

Question number	Q1	Q2	Q3	Q4	Q5	Q6	Q7	Q8	Total
Student Mark									
Question Total	20	40	31	29	18	26	22	14	200

Study copy distributed by EduResource ZA | eduresourcza.com

QUESTION 1 MULTIPLE CHOICE

Answer these questions on the answer grid below. Make a cross (X) in the box corresponding to the letter that you consider to be correct.

A	B	~~C~~	D

Here, option C has been marked as an example.

1.1	A	B	C	D
1.2	A	B	C	D
1.3	A	B	C	D
1.4	A	B	C	D
1.5	A	B	C	D
1.6	A	B	C	D
1.7	A	B	C	D
1.8	A	B	C	D
1.9	A	B	C	D
1.10	A	B	C	D

Study copy distributed by EduResource ZA | eduresourcza.com

1.1 Which row correctly states whether momentum, mass and velocity are scalar or vector quantities?

	Momentum	**Mass**	**Velocity**
A	scalar	scalar	vector
B	vector	scalar	scalar
C	scalar	vector	scalar
D	vector	scalar	vector

1.2 An object uniformly accelerates from rest in a straight line. After travelling a distance ***d,*** its velocity is ***v***. What is its velocity after it has travelled ***3d***?

A $3 \times v$

B $6 \times v$

C v^2

D $\sqrt{3} \times v$

Study copy distributed by EduResource ZA | eduresourcza.com

1.3 The following velocity-time graph represents the motion of an object moving vertically through the air near the Earth's surface.

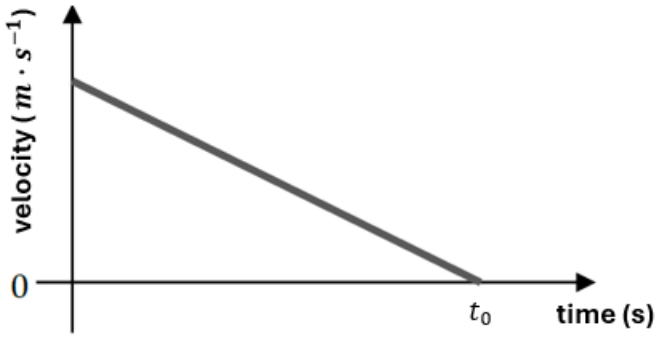

Use the graph to identify the positive direction of motion as well as the significance of time t_0.

	Positive direction	**At time t_0 the object…**
A	up	… hits the ground
B	down	… hits the ground
C	up	… reaches a maximum height
D	down	… reaches a maximum height

1.4 A person stands on a scale in an elevator (a lift). He notices that the scale reading is lower than his usual weight. Which of the following could possibly describe the motion of the elevator (the lift)?

A It is stationery.

B It is moving down at a constant speed.

C It is moving down and speeding up.

D. It is moving up and speeding up.

Study copy distributed by EduResource ZA | eduresourcza.com

1.5 The momentum of a car vs time is illustrated in the graph below.

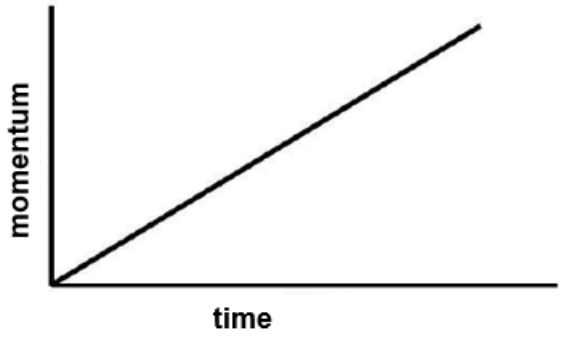

What does the gradient of the graph represent?

A the rate of change of velocity of the car.
B the change in kinetic energy of the car.
C the resultant force on the car.
D the acceleration of the car.

1.6 Two masses experience a force ***F*** when held a distance ***r*** apart. How would this force be affected if both masses are tripled and the distance between them is halved?

A 36 ***F***
B 24 ***F***
C 18 ***F***
D 2,25 ***F***

Study copy distributed by EduResource ZA | eduresourcza.com

1.7 A kettle that is rated 1500 W is used for a total of 18 minutes on a day to boil water for tea and coffee. If a kWh from City Power costs 72 cents, how much did it cost to run the kettle for the day?

A 13 cents

B 32 cents

C R 19,44

D. R 324

1.8 In the circuit shown below, the resistances of the battery, switch and connecting wires can be ignored. Both voltmeters have a very high resistance. The resistors are all identical.

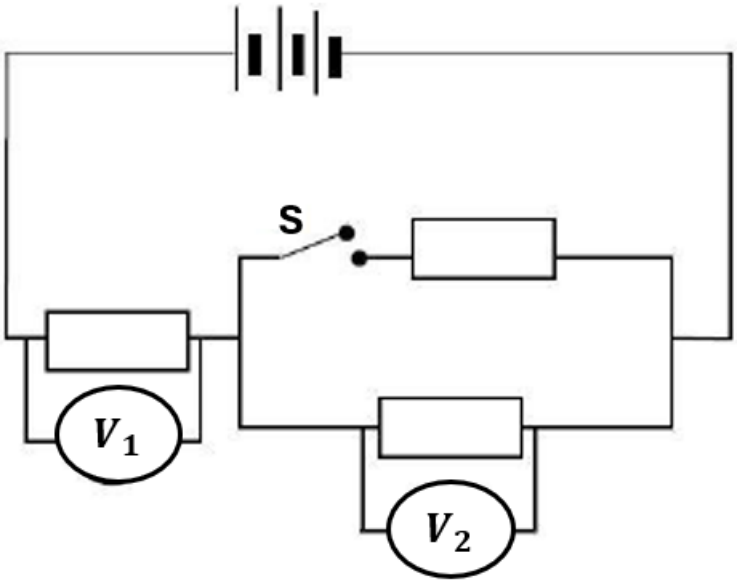

How do the readings on **V_1** and **V_2** change when the switch (**S**) is closed?

	V_1	**V_2**
A	No change	Decreases
B	Increases	Increases
C	Decreases	Increases
D	Increases	Decreases

Study copy distributed by EduResource ZA | eduresourcza.com

1.9 Two circuits are shown below incorporating a battery, several diodes, and an LED. In which circuit will the LED light up?

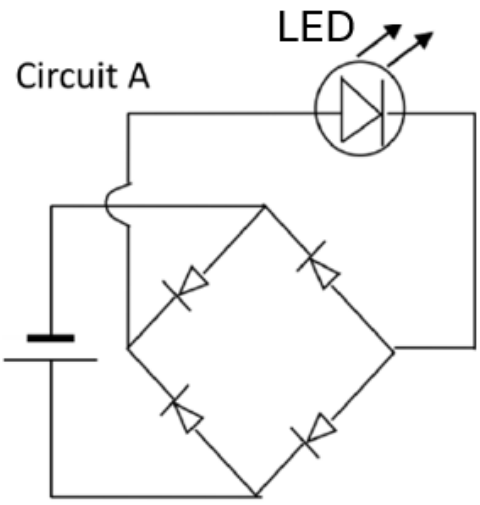

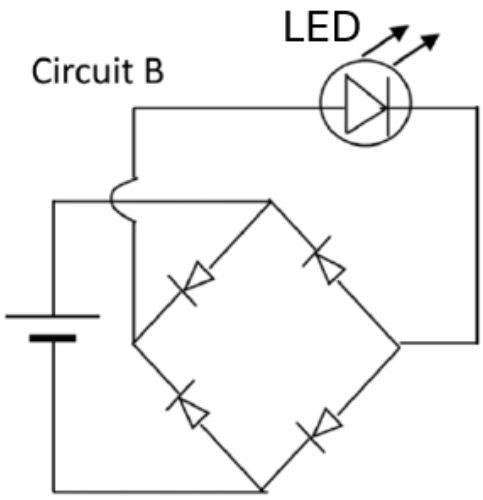

A Circuit A and B

B Circuit A

C Circuit B

D Neither will light up

Study copy distributed by EduResource ZA | eduresourcza.com

1.10 The graph below shows the maximum kinetic energy of electrons ejected from two different metals against the frequency of the incident light. Which metal has a greater work function?

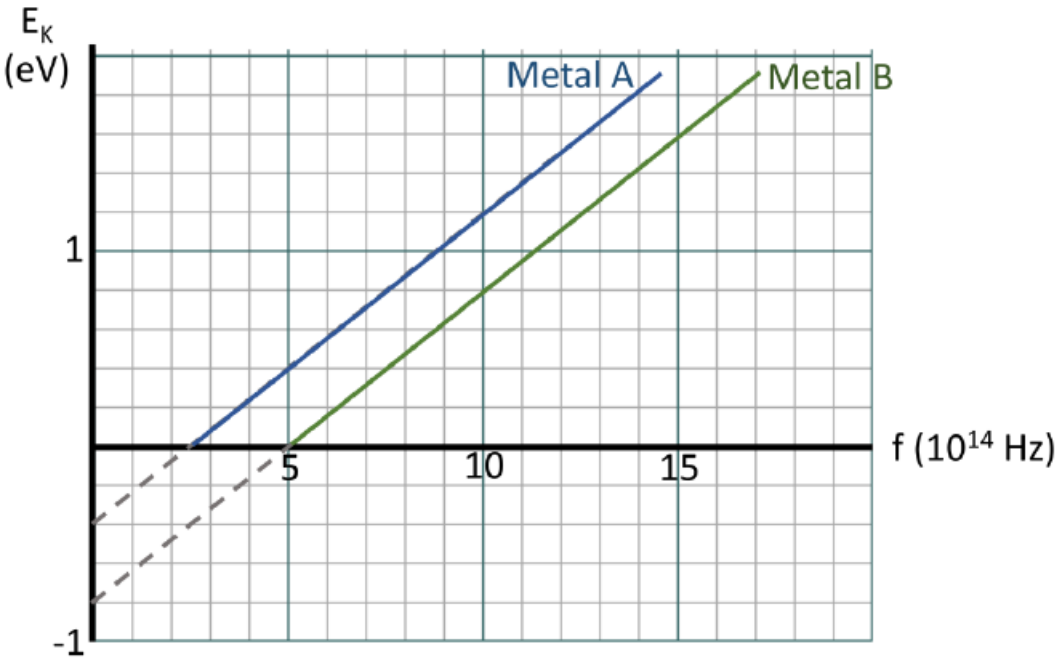

A They both have the same work function

B Metal A

C Metal B

D The work function cannot be determined from the graph.

[2 x 10 = 20]

Study copy distributed by EduResource ZA | eduresourcza.com

QUESTION 2 KINEMATICS

2.1 On the road from Johannesburg to Durban, average speed cameras are used to enforce the speed limit of 120 km·h^{-1}. The system works by using two cameras, **80 km** apart, to read a car's number plate and calculate its average speed.

While travelling from Johannesburg to Durban, a motorist passes camera **A** at 09:42 am and then passes camera **B** at 10:20 am

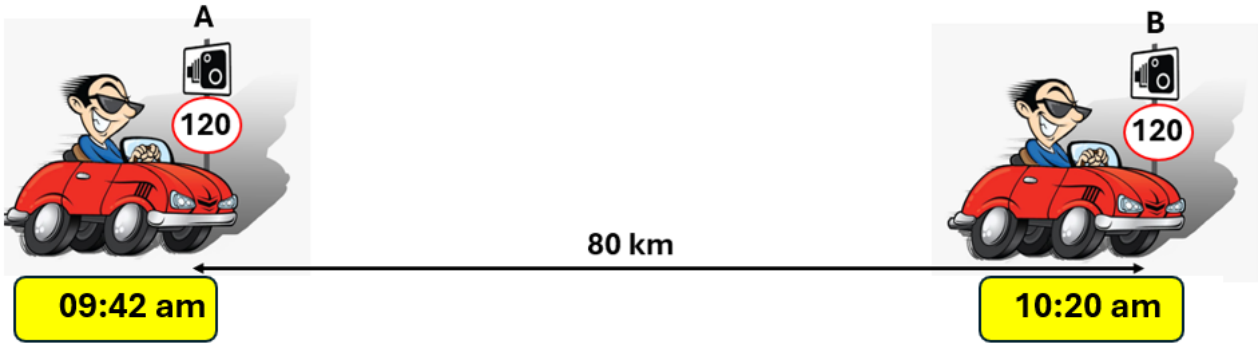

2.1.1 Convert **120 km·h^{-1}** to **m·s^{-1}.** (1)

2.1.2 Calculate the time (in seconds) that it takes the motorist to travel between the two average speed cameras. (3)

2.1.3 Define *speed.* (2)

Study copy distributed by EduResource ZA | eduresourcza.com

2.1.4 Did the motorist exceed the average speed limit? Use a calculation to substantiate your answer. (4)

2.2 On another part of his journey to Durban the motorist was travelling at a constant speed of 27.78 $m \cdot s^{-1}$ when he passes a traffic officer in a car with an instantaneous speed camera. The traffic officer immediately starts his car from rest and chases the motorist. The traffic officer accelerates at 5 $m \cdot s^{-2}$.

2.2.1 Calculate the time it takes for the traffic officer to catch up to the motorist. (6)

Study copy distributed by EduResource ZA | eduresourcza.com

2.3 A hot-air balloon moves vertically downwards at a constant velocity of 3,4 $m \cdot s^{-1}$. When the balloon is 15 m above the ground, a small ball (mass 200 g) is dropped from the balloon. The ball falls freely. Refer to the diagram below.

(USE <u>DOWN</u> AS THE POSITIVE DIRECTION)

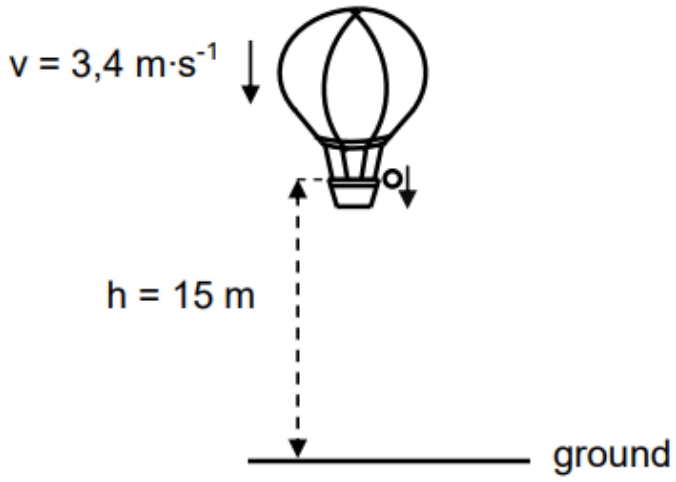

2.3.1 What is the acceleration of the ball. (2)

2.3.2. Calculate the time it takes for the ball to reach the ground for the first time after it was dropped from the balloon. (3)

2.3.3. Calculate the velocity that the ball strikes the ground with after it is dropped from the balloon. (3)

Study copy distributed by EduResource ZA | eduresourcza.com

2.3.5 The ball bounces upwards with a velocity of 7.2 $m \cdot s^{-1}$ after striking the ground**.** Calculate the maximum height reached after the first bounce. (4)

2.3.4 The ball (**mass 200 g**) was in contact with the ground for 0.15 seconds during the first bounce.

a) State ***Newtons Second Law in terms of momentum***. (2)

b) Calculate the net force exerted by the ground on the ball during the first bounce. (4)

Study copy distributed by EduResource ZA | eduresourcza.com

2.3.6 Draw a sketch graph of velocity against time to describe the motion of the ball from the time that it was dropped until it reaches the maximum height after the first bounce.

The graph should include all velocity and time values that was given and calculated. (6)

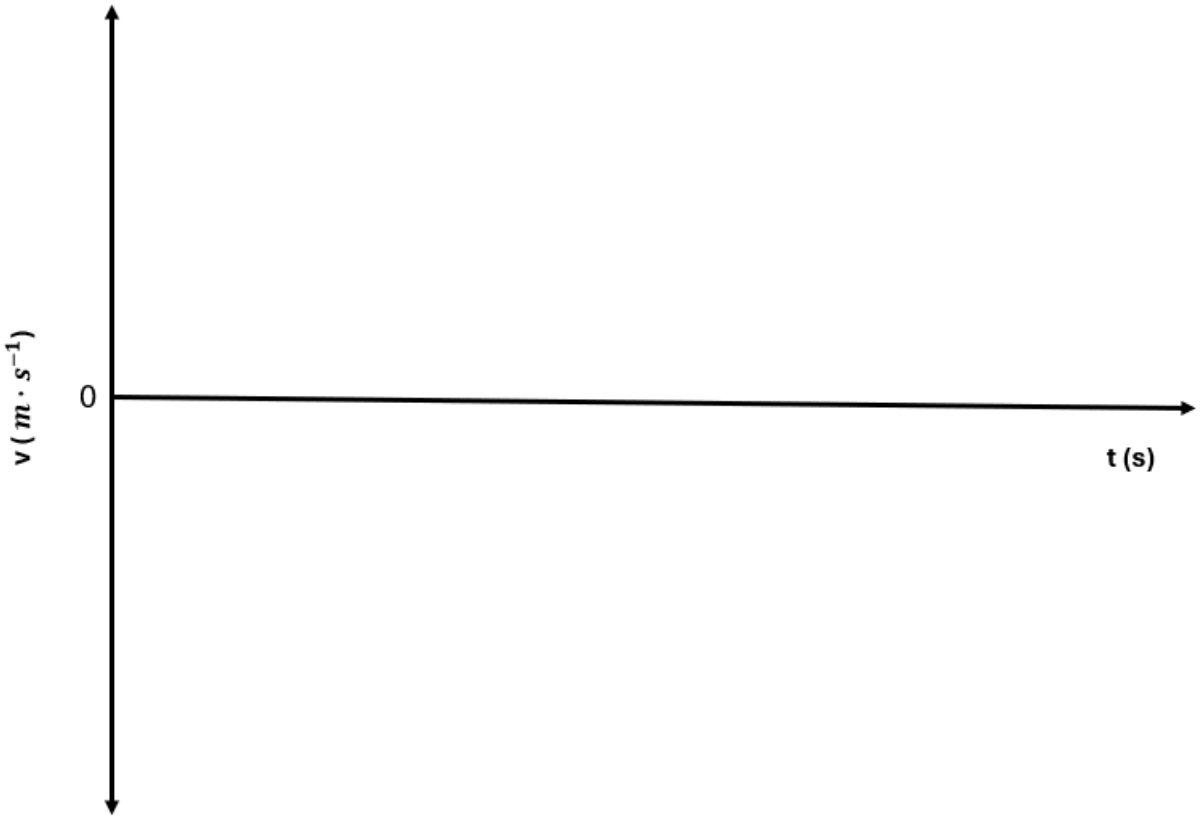

[40]

Study copy distributed by EduResource ZA | eduresourcza.com

QUESTION 3 NEWTON'S LAWS

3.1 Two boxes, **P** and **Q**, resting on a rough horizontal surface, are connected by a light inextensible string. The boxes have masses 5 kg and 2 kg respectively. A constant force **F**, acting at an angle of 30° to the horizontal, is applied to the 5 kg box, as shown below. The two boxes now move to the right at a constant speed of 2 $m \cdot s^{-1}$.

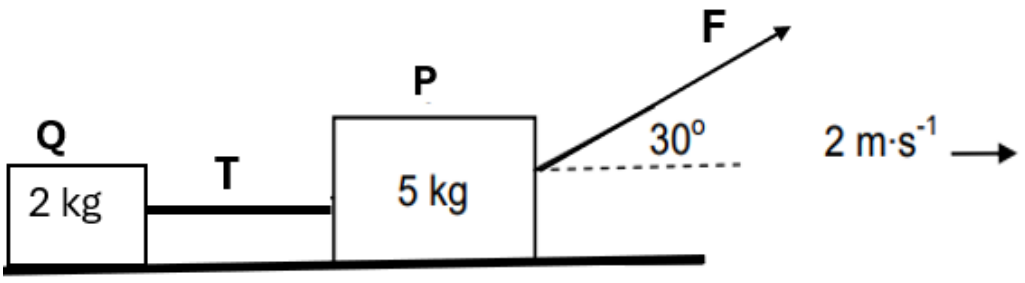

3.1.1 State *Newtons First Law of Motion*. (2)

3.1.2 Draw a labelled free-body diagram of all the forces acting on box **P**. (5)

Study copy distributed by EduResource ZA | eduresourcza.com

Box **P** experiences a constant frictional force of 5 N and box **Q** experiences a constant frictional force of 3 N.

3.1.3 Calculate the magnitude of force **F**. (6)

3.1.4 The angle at which force **F** is applied to box **P** is now decreased.

a) Define *frictional force.* (2)

b) How would this change affect the frictional force on box **P**? Write only INCREASE, DECREASE or REMAIN THE SAME. (1)

c) Fully explain your answer to **3.1.4 b** (Use appropriate equations to explain your answer.) (4)

Study copy distributed by EduResource ZA | eduresourcza.com

3.2 Two boxes, **A** and **B,** are placed on a frictionless surface, connected by a frictionless pulley and situated inclines, as shown in the diagram below. Box **A** has a mass of **2m**, and box **B** has a mass of **m**. A force **F** (60 N) is applied parallel to the incline to box**A**, causing the system to accelerate in an anticlockwise direction.

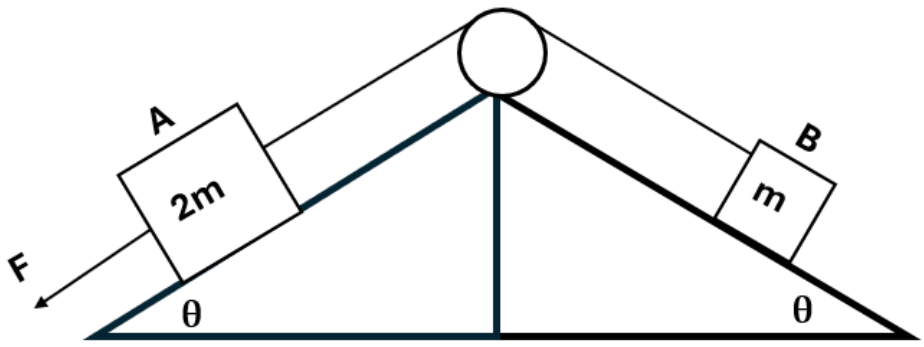

3.2.1 Draw a fully labelled free body diagram of all the forces acting on Box **A**. (4)

3.2.2 Derive an expression for the acceleration ***a*** in terms of **m** and **θ**. (4)

Study copy distributed by EduResource ZA | eduresourcza.com

3.2.3 Use your answer from **Q 3.2.2** and given that the angle of the incline **θ is such that sin θ = 0.5,** calculate the mass of **Box B** if the acceleration of the system is **2 m·s^{-2}**. (3)

[31]

Study copy distributed by EduResource ZA | eduresourcza.com

QUESTION 4 MOMEMTUM AND IMPULSE

4.1. A wooden block of mass 150 g is freely supported on brackets at a height of 4 m when a bullet of mass 50 g is fired vertically upwards at a speed of 200 $m \cdot s^{-1}$ from a height of 1.8 m as shown in the diagram below.

The bullet embeds itself into the block and the bullet-block system rises vertically into the air for a few seconds and falls back to its original position.

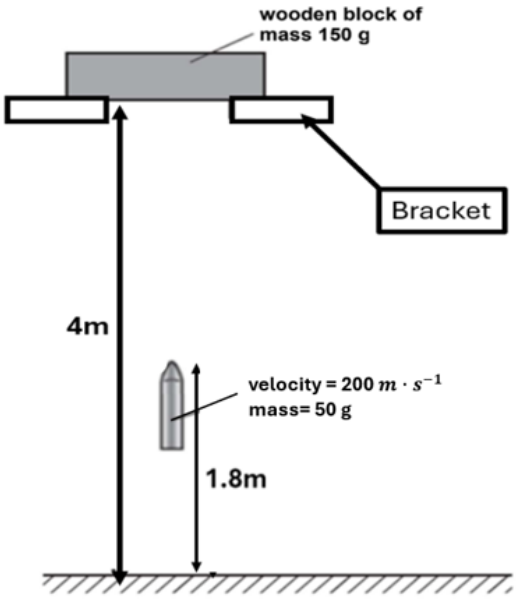

4.1.1 What is the position of the bullet relative to the bottom of the block when it is fired? (2)

4.1.2 Calculate the speed of the bullet when it strikes the block. (3)

Study copy distributed by EduResource ZA | eduresourcza.com

4.1.3 State the *Law of Conservation of Momentum* in words. (2)

4.1.4 Calculate the magnitude of the velocity of the bullet block system immediately after the bullet becomes embedded in the block. (4)

4.1.5 Define *elastic collision.* (2)

4.1.6 Is the collision between the bullet and block ELASTIC or INELASTIC. Explain by using a calculation to justify your answer. (5)

Study copy distributed by EduResource ZA | eduresourcza.com

4.2 An ice skater of mass 53 kg moves on a frictionless surface **AB** with a velocity of 6 m·s^{-1} and then slides up a rough inclined surface **BC** until coming to a stop at point **C**, 1,5 m above the horizontal.

The angle between the incline and the horizontal is **θ.**

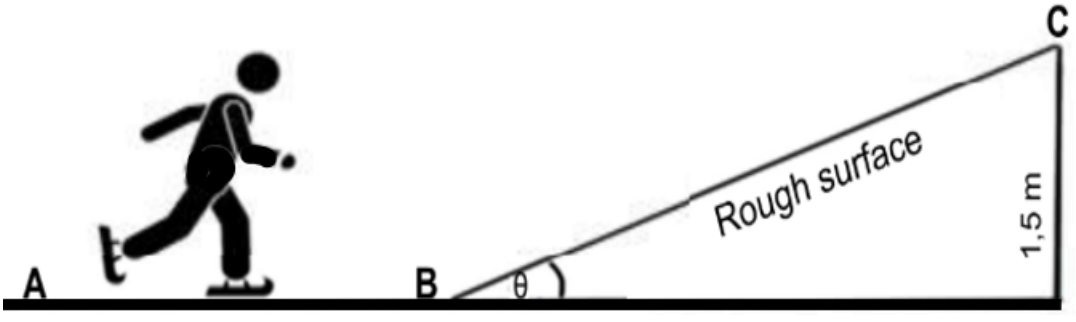

4.2.1 Draw a labelled free body diagram showing all the forces acting on the skater when he is on the incline. (3)

4.2.2 State the *work-energy theorem* in words. (2)

Study copy distributed by EduResource ZA | eduresourcza.com

4.2.3 Calculate the angle **θ** of the slope if the skater experiences a frictional force of **20 N** while skating up the slope. (6)

[29]

Study copy distributed by EduResource ZA | eduresourcza.com

QUESTION 5 FIELDS

5.1 Planet **X** is a relatively small planet with a radius of **3.2 x 10^6 m**. The gravitational field strength at different distances from the centre of planet **X** is recorded in the table.

r (x 10^6 m)	$\frac{1}{r^2}$ (x 10^{-13} m^{-2})	Gravitational field strength ($N \cdot kg^{-1}$)
2.50	1.6	3.50
2.70	1.4	3.10
3.50	**missing value**	1.75
4.10	0.6	1.2
5.80	0.3	0.70

5.1.1 Calculate the missing value in the table. (1)

5.1.2 Define *gravitational field strength*. (2)

5.1.3 Plot a graph of gravitational field strength (on the y axis) vs $\frac{1}{r^2}$ (on the x axis) on the graph paper provided on the next page. (7)

Study copy distributed by EduResource ZA | eduresourcza.com

Study copy distributed by EduResource ZA | eduresourcza.com

5.1.4 Calculate the gradient of your graph. Show the values that you used on your graph and in your calculation. No units are required in your answer. (4)

5.1.6 Use an appropriate equation and your gradient to calculate the mass of planet **X**.

(4)

[18]

Study copy distributed by EduResource ZA | eduresourcza.com

QUESTION 6 ELECTRIC CIRCUITS

The circuit below consists of a battery with no internal resistance, a fan with a power rating of 50 W and a fixed resistance, R_1 with a resistance of 100 Ω, a lightbulb with a resistance of 100 Ω, a voltmeter, an ammeter and a closed switch S.

The ammeter reads 1 A.

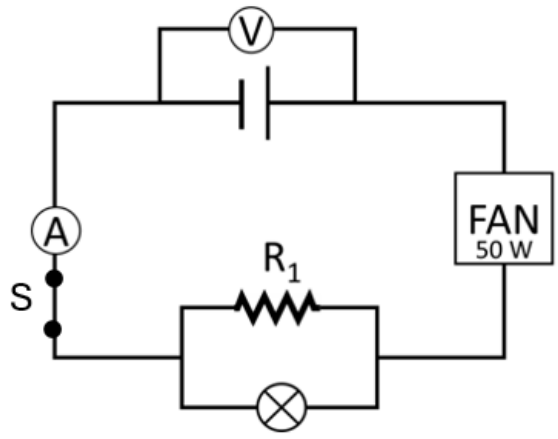

6.1 Define *current.* (2)

6.2 Determine the resistance of the fan? (3)

6.3 Calculate the reading on the voltmeter. (5)

6.4. How much energy is dissipated by the fan in **2 minutes.** (3)

Study copy distributed by EduResource ZA | eduresourcza.com

The battery is now replaced by a **different battery** which has an internal resistance of 1 Ω. The ammeter now reads 2 A.

6.5 Define *emf.* (2)

6.6 Calculate the emf of the battery. (4)

6.7 Calculate the new reading on the voltmeter when switch S is closed. (3)

6.8 Resistor $\mathbf{R_1}$ burns out

a) What will happen to the reading on the voltmeter? Write only INCREASE, DECREASE or REMAIN THE SAME. (1)

b) Use appropriate physics principles and formulae to fully explain your answer to **6.8 a.** (3)

[26]

Study copy distributed by EduResource ZA | eduresourcza.com

QUESTION 7 ELECTRODYNAMICS

7.1 The simplified diagram below illustrates a DC electric motor.

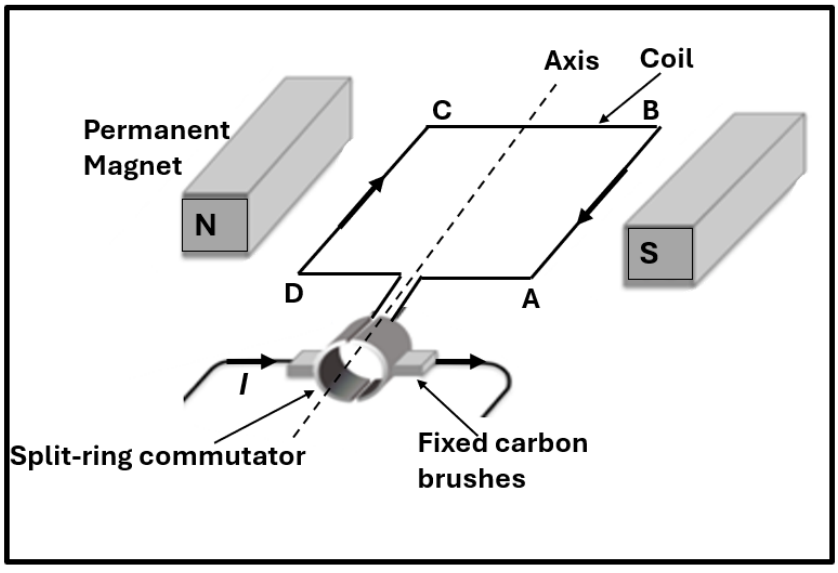

The arrows show the direction of current as it enters and exits the coil through the carbon brushes and the split-ring commutator.

7.1.1 State whether the coil turns clockwise or anticlockwise when viewed from the split-ring commutator. (2)

7.1.2 State the function of the split-ring commutator. (2)

7.1.3 List three ways in which the turning force that the coil experiences can be increased. (3)

Study copy distributed by EduResource ZA | eduresourcza.com

7.2 The diagram below shows a transformer.

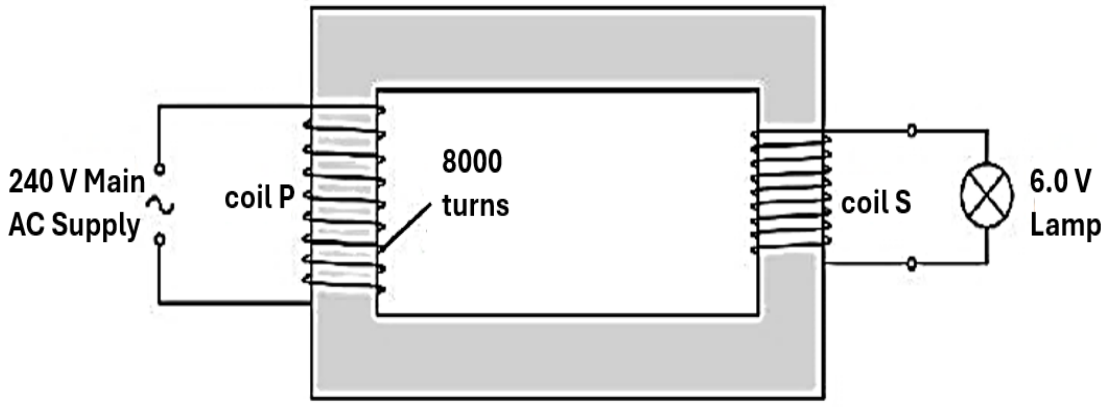

The primary coil **P**, connected to the **240 V** mains supply, has **8000 turns.**

The secondary coil **S** supplies **6 V** to a lamp.

7.2.1 Calculate the number of turns in the secondary coil. (3)

7.2.2 The current in the primary coil is 0,05 A. Calculate the current induced in the secondary coil. (3)

Study copy distributed by EduResource ZA | eduresourcza.com

7.3 A secondary coil **(S)** has a primary solenoid **(P)** wound around the middle as shown in the diagram. (Diagram not drawn to scale).

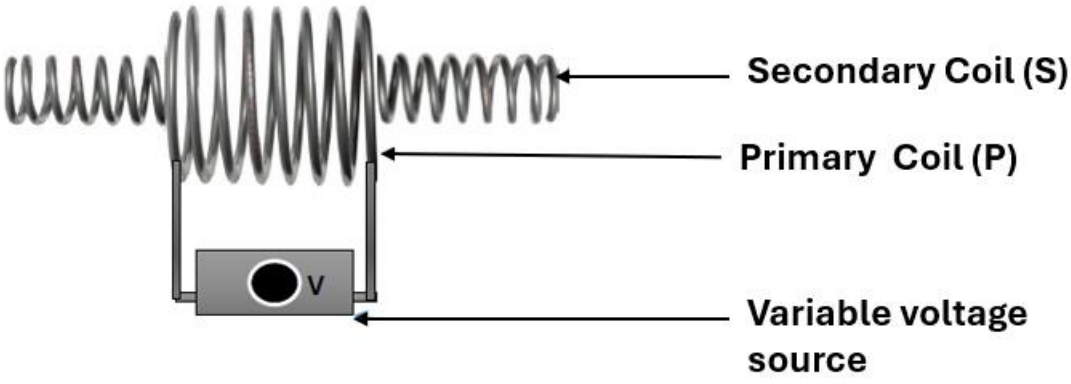

The current in the **primary solenoid** is changed with time as shown on the graph below.

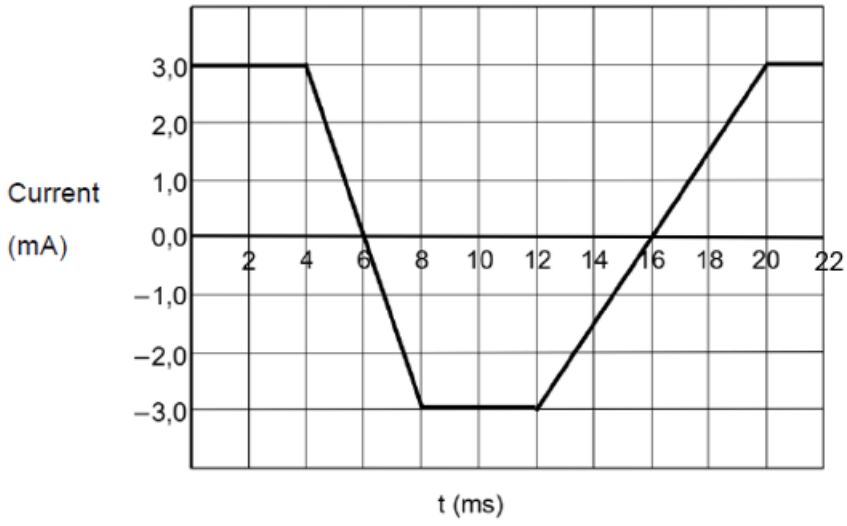

7.3.1 State *Faraday's law of Electromagnetic Induction*. (2)

Study copy distributed by EduResource ZA | eduresourcza.com

7.3.2 Explain why an emf is induced in the secondary coil. (3)

The **maximum emf** induced in the secondary solenoid is **200 mV**.

7.3.3 On the graph provided **below**, draw the corresponding induced emf vs time graph for the **secondary coil**. The relative sizes of the emf must be included on the graph. (4)

Induced emf vs. time

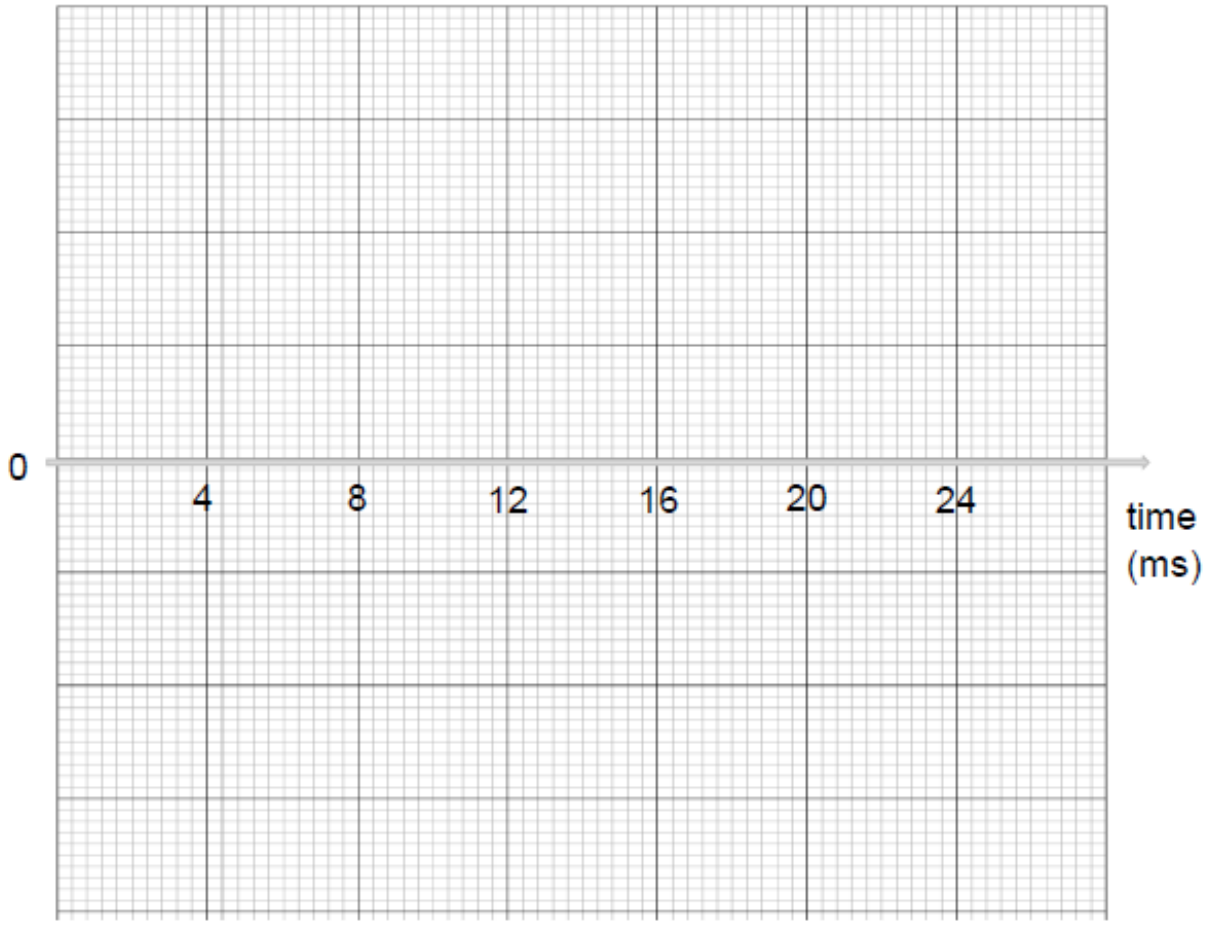

[22]

Study copy distributed by EduResource ZA | eduresourcza.com

QUESTION 8 PHOTONS AND ELECTRONS

8.1 UV light of frequency $9,1 \times 10^{14}$ Hz is shone onto silver metal. The work function of silver is $4,33 \times 10^{-19}$ J. Electrons are ejected from the silver metal.

8.1.1 Define *threshold frequency*. (2)

8.1.2 Determine the threshold frequency for silver. (3)

8.1.3 Red light replaces the UV light and is shone onto the silver. It is observed that no electrons are emitted from the surface of the metal. Explain why this occurs. (2)

Study copy distributed by EduResource ZA | eduresourcza.com

8.2 In the Light Emission Spectrum of a certain metal, light of wavelength 542 nm is emitted when an electron transition occurs between the fifth and second energy level.

8.2.1 Calculate the energy of the photon of light that is emitted. (3)

8.2.2 The second energy level has an energy of 2.61 eV. Use this information to calculate the energy of the fifth orbital. Express your answer in joules. (4)

[14]

Total Mark 200

Study copy distributed by EduResource ZA | eduresourcza.com

ADDITIONAL WORKING OUT PAGE

Study copy distributed by EduResource ZA | eduresourcza.com

ADDITIONAL WORKING OUT PAGE

Study copy distributed by EduResource ZA | eduresourcza.com

2.3.6

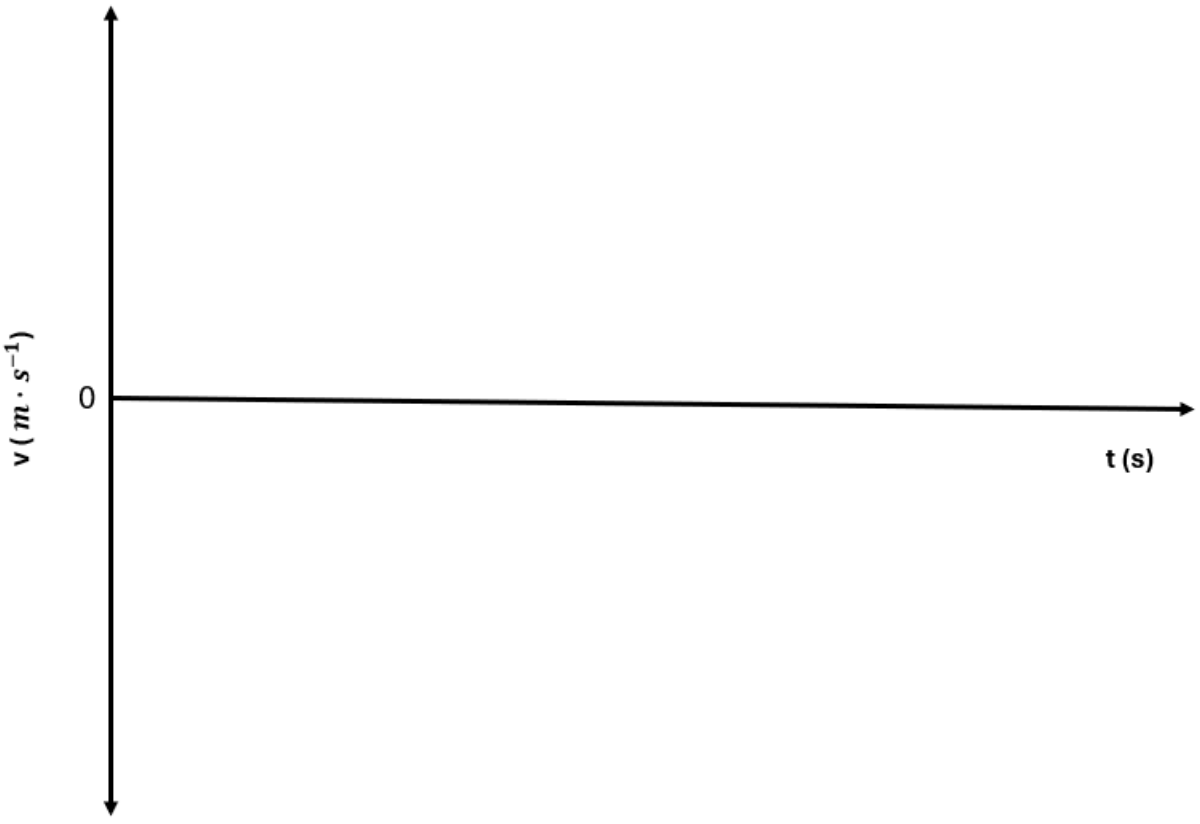

Study copy distributed by EduResource ZA | eduresourcza.com

5.1.3.

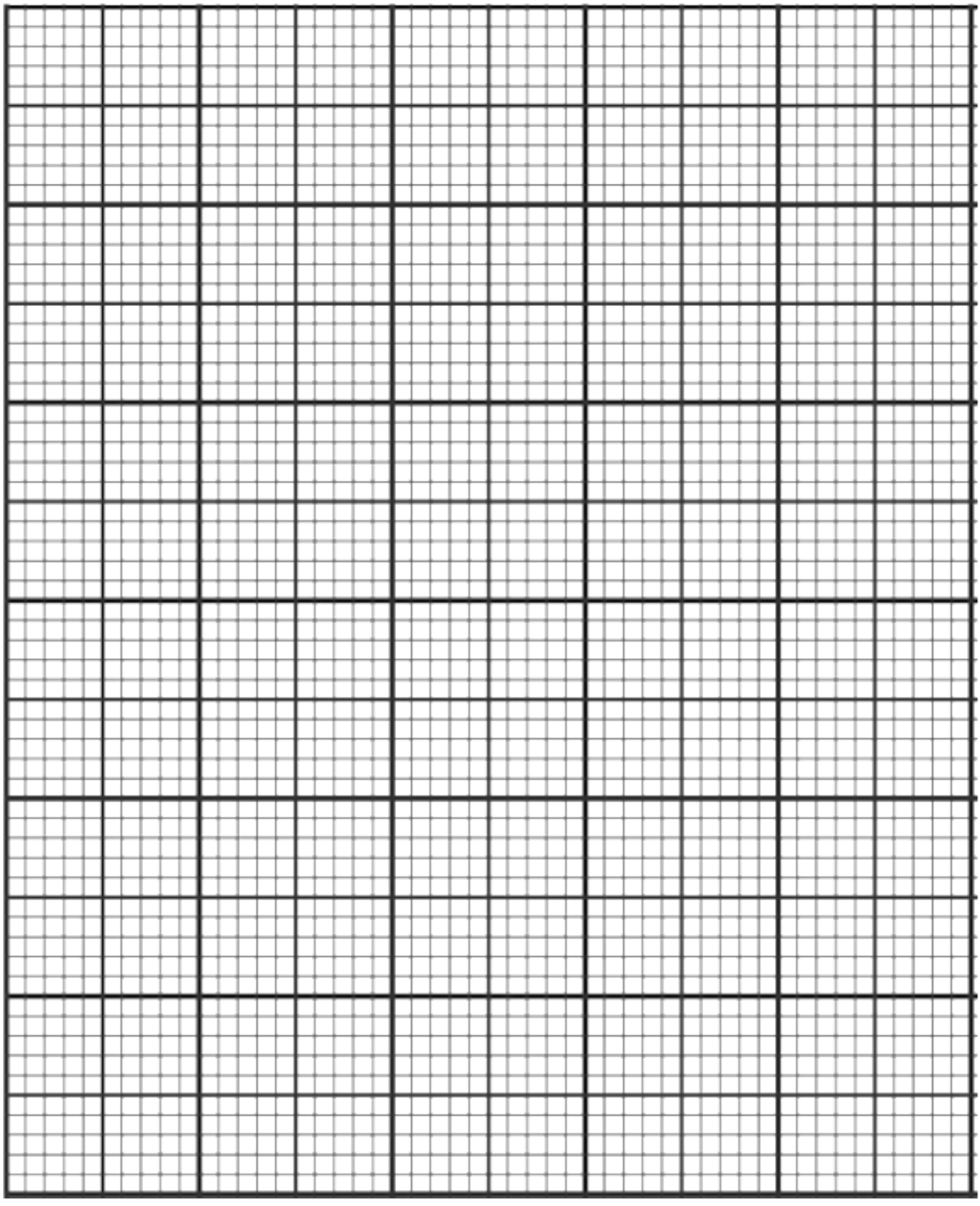

Study copy distributed by EduResource ZA | eduresourcza.com

7.3.3

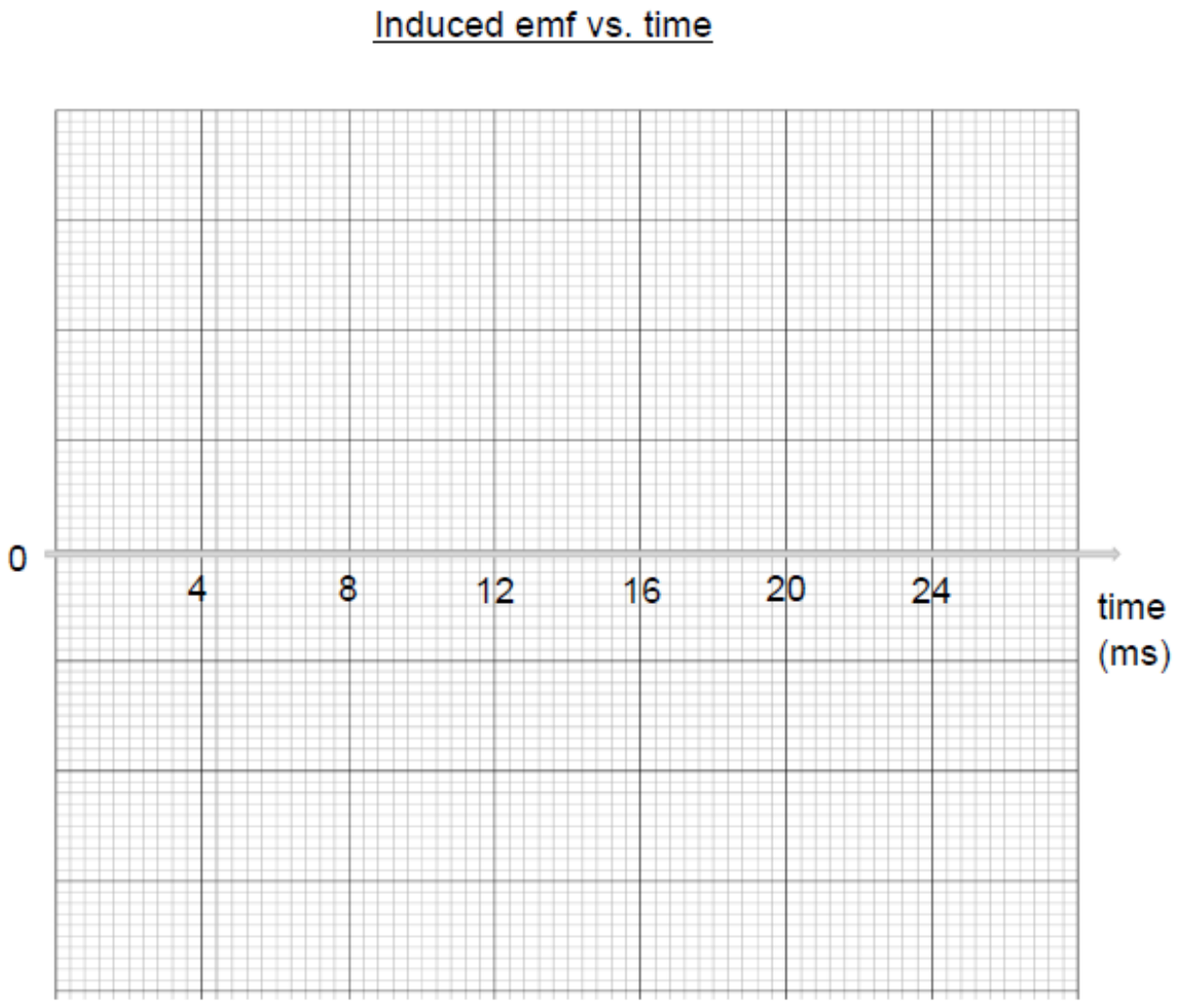

Study copy distributed by EduResource ZA | eduresourcza.com