eduresourceza.com

Downloaded from eduresourceza.com

Cambridge IGCSE

Cambridge Assessment International Education
Cambridge International General Certificate of Secondary Education

CANDIDATE NAME

CENTRE NUMBER

CANDIDATE NUMBER

* 4 0 4 9 4 3 3 1 8 3 *

CHEMISTRY **0620/43**

Paper 4 Theory (Extended) **October/November 2019**

1 hour 15 minutes

Candidates answer on the Question Paper.

No Additional Materials are required.

READ THESE INSTRUCTIONS FIRST

Write your centre number, candidate number and name on all the work you hand in.
Write in dark blue or black pen.
You may use an HB pencil for any diagrams or graphs.
Do not use staples, paper clips, glue or correction fluid.
DO **NOT** WRITE IN ANY BARCODES.

Answer **all** questions.
Electronic calculators may be used.
A copy of the Periodic Table is printed on page 16.
You may lose marks if you do not show your working or if you do not use appropriate units.

At the end of the examination, fasten all your work securely together.
The number of marks is given in brackets [ ] at the end of each question or part question.

This syllabus is regulated for use in England, Wales and Northern Ireland as a Cambridge International Level 1/Level 2 Certificate.

This document consists of **14** printed pages and **2** blank pages.

© UCLES 2019

Cambridge Assessment International Education

[Turn over

Downloaded from eduresourceza.com

Downloaded from eduresourceza.com

1 **(a)** Atoms are made of smaller particles called electrons, neutrons and protons.

Complete the table.

particle	relative charge	relative mass
electron		$\frac{1}{1840}$
neutron		
proton	+1	

[2]

(b) The table gives information about atoms and ions **A**, **B** and **C**.

Complete the table.

	number of electrons	number of neutrons	number of protons	symbol
A		14	13	$^{27}_{13}Al$
B			12	$^{25}_{12}Mg^{2+}$
C	10	10	9	

[6]

[Total: 8]

Downloaded from eduresourceza.com

Downloaded from eduresourceza.com

2 The table shows the melting points, boiling points and electrical conductivities of six substances **D**, **E**, **F**, **G**, **H** and **I**.

substance	melting point / °C	boiling point / °C	electrical conductivity when solid	electrical conductivity when liquid
D	1610	2230	non-conductor	non-conductor
E	801	1413	non-conductor	good conductor
F	–119	43	non-conductor	non-conductor
G	1535	2750	good conductor	good conductor
H	114	184	non-conductor	non-conductor
I	–210	–196	non-conductor	non-conductor

Choose substances from the table which match the following descriptions. Each substance may be used once, more than once or not at all.

(a) Which substance is a liquid at 25 °C? ..... [1]

(b) Which substance is a gas at 25 °C? ..... [1]

(c) Which **three** substances contain simple molecules?

..... [3]

(d) Which substance could be a metal? Give a reason for your answer.

substance .....

reason .....

.....
[2]

(e) Which substance has a macromolecular structure? Give **two** reasons for your answer.

substance .....

reason 1 .....

reason 2 .....
[3]

(f) Which substance is an ionic solid? Give **one** reason for your answer.

substance .....

reason .....

.....
[2]

[Total: 12]

Downloaded from eduresourceza.com

Downloaded from eduresourceza.com

3 **(a)** Name the ore of aluminium which mainly consists of aluminium oxide.

..... [1]

(b) Aluminium is produced by the electrolysis of aluminium oxide dissolved in molten cryolite.

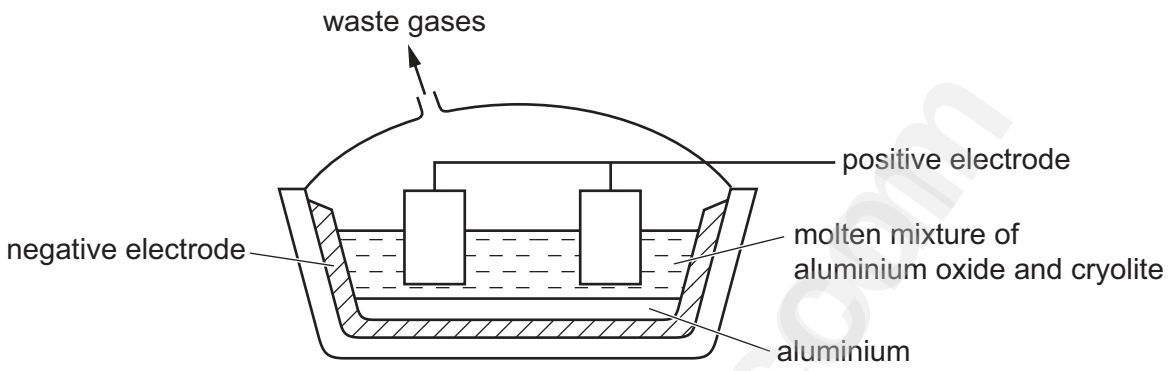

(i) Give **two** reasons why the electrolysis is done using a molten mixture of aluminium oxide and cryolite instead of molten aluminium oxide only.

1 .....

2 .....
[2]

(ii) Write ionic half-equations for the reactions occurring at the electrodes.

positive electrode .....

negative electrode .....
[2]

(iii) The anodes are made of carbon and have to be replaced regularly.

Explain why the carbon anodes have to be replaced regularly.

.....

..... [2]

Downloaded from eduresourceza.com
© UCLES 2019

Downloaded from eduresourceza.com

(c) The positions of some common metals in the reactivity series are shown.

most reactive	magnesium
↑	aluminium
least reactive	copper

(i) When magnesium is placed in aqueous copper(II) sulfate a displacement reaction occurs immediately.

Write an ionic equation for the reaction. Include state symbols.

..... [2]

(ii) State **two** observations you would make when magnesium is placed in aqueous copper(II) sulfate.

1 .....

2 .....
[2]

(iii) When aluminium foil is added to aqueous copper(II) sulfate no immediate reaction takes place.

Explain why.

..... [1]

(d) Aluminium powder reacts with iron(III) oxide to produce aluminium oxide and iron.

Write a chemical equation for this reaction.

..... [2]

[Total: 14]

Downloaded from eduresourceza.com

Downloaded from eduresourceza.com

4 This question is about phosphorus and compounds of phosphorus.

(a) A phosphorus molecule contains four phosphorus atoms **only**.

What is the formula of a phosphorus molecule?

..... [1]

(b) Phosphorus reacts with chlorine gas to produce phosphorus(III) chloride, PCl_3.

(i) Write a chemical equation for the reaction between phosphorus and chlorine to produce phosphorus(III) chloride, PCl_3.

..... [2]

(ii) Complete the dot-and-cross diagram to show the electron arrangement in a molecule of phosphorus(III) chloride, PCl_3. Show outer shell electrons only.

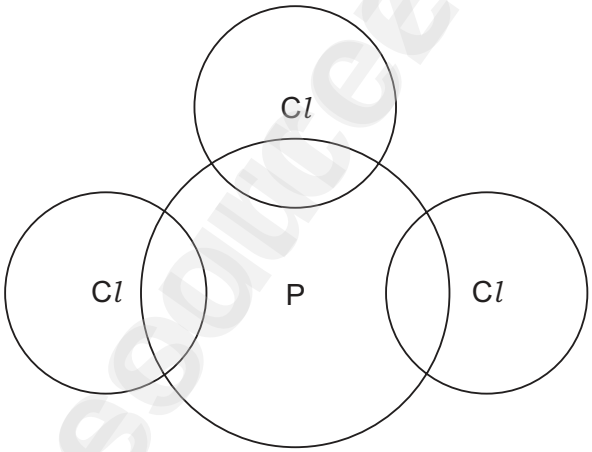

[2]

Downloaded from eduresourceza.com

Downloaded from eduresourceza.com

(c) Gaseous phosphorus(III) chloride, PCl_3, reacts with gaseous chlorine to form gaseous phosphorus(V) chloride, PCl_5.

$$PCl_3(g) + Cl_2(g) \rightarrow PCl_5(g)$$

The chemical equation for this reaction can be represented as shown.

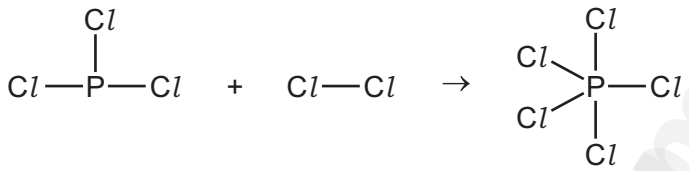

(i) Use the bond energies in the table to calculate the energy change, in kJ/mol, of the reaction.

bond	bond energy in kJ/mol
P–Cl	326
Cl–Cl	243

- Energy needed to break bonds.

..... kJ

- Energy released when bonds are formed.

..... kJ

- Energy change of reaction.

energy change = ... kJ/mol
[3]

(ii) Deduce whether the energy change for this reaction is exothermic or endothermic. Explain your answer.

.....

..... [1]

Downloaded from eduresourceza.com

Downloaded from eduresourceza.com

(d) Under certain conditions the reaction reaches equilibrium.

$$PCl_3(g) + Cl_2(g) \rightleftharpoons PCl_5(g)$$

State and explain the effect, if any, on the **position of equilibrium** if the pressure is increased. All other conditions are unchanged.

.....

.....

..... [2]

(e) Phosphine, PH_3, is produced by the reaction between water and calcium phosphide, Ca_3P_2.

Balance the chemical equation for this reaction.

$$Ca_3P_2 + ...H_2O \rightarrow .....Ca(OH)_2 + ...PH_3$$ [2]

(f) The phosphonium ion, PH_4^+, is similar to the ammonium ion.

(i) State the formula of the ammonium ion. ..... [1]

(ii) Suggest the formula of phosphonium iodide. ..... [1]

(g) Calcium phosphate contains the phosphate ion, PO_4^{3-}.

What is the formula of calcium phosphate?

..... [1]

(h) Phosphorus forms another compound with hydrogen with the following composition by mass: P, 93.94%; H, 6.06%.

(i) Calculate the empirical formula of the compound.

empirical formula = ... [2]

(ii) The compound has a relative molecular mass of 66.

Deduce the molecular formula of the compound.

molecular formula = ... [1]

[Total: 19]

Downloaded from eduresourceza.com

Downloaded from eduresourceza.com

5 Nitrates such as ammonium nitrate are used as fertilisers.

The final stage in the production of ammonium nitrate is shown in the equation.

$$Ca(NO_3)_2 + 2NH_3 + CO_2 + H_2O \rightarrow 2NH_4NO_3 + CaCO_3$$

Calculate the maximum mass of ammonium nitrate that can be produced from 820 g of calcium nitrate, $Ca(NO_3)_2$, using the following steps.

The relative formula mass, M_r, of calcium nitrate, $Ca(NO_3)_2$, = 164.

- Calculate the number of moles of $Ca(NO_3)_2$ in 820 g.

..... mol

- Deduce the number of moles of NH_4NO_3 produced.

..... mol

- Calculate the M_r of NH_4NO_3.

M_r of NH_4NO_3 = ...

- Calculate the maximum mass of ammonium nitrate produced.

..... g
[4]

Downloaded from eduresourceza.com

Downloaded from eduresourceza.com

6 This question is about sulfuric acid and substances that can be made from sulfuric acid.

(a) Sulfuric acid is a strong acid.

What is meant by the term *strong acid*?

strong .....

acid .....
[2]

(b) Dilute sulfuric acid and aqueous sodium hydroxide are used to make aqueous sodium sulfate, $Na_2SO_4(aq)$, or aqueous sodium hydrogen sulfate, $NaHSO_4(aq)$. The method includes use of the following apparatus.

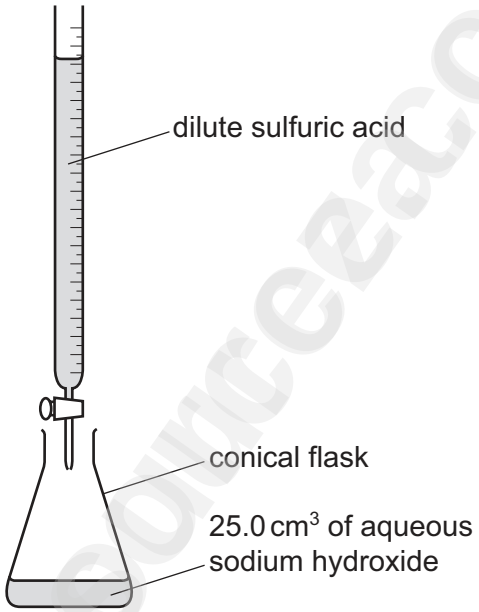

25.0 cm^3 of aqueous sodium hydroxide of concentration 0.100 mol / dm^3 was neutralised by 25.0 cm^3 of dilute sulfuric acid of concentration 0.0500 mol / dm^3. The equation for the reaction is shown. This is **reaction 1**.

$$2NaOH(aq) + H_2SO_4(aq) \rightarrow Na_2SO_4(aq) + 2H_2O(l)$$ **reaction 1**

The same technique and the same solutions can be used to make aqueous sodium hydrogen sulfate. The equation for the reaction is shown. This is **reaction 2**.

$$NaOH(aq) + H_2SO_4(aq) \rightarrow NaHSO_4(aq) + H_2O(l)$$ **reaction 2**

Complete the table to calculate the volume of dilute sulfuric acid that reacts with 25.0 cm^3 of aqueous sodium hydroxide in **reaction 2**.

	volume of 0.0500 mol / dm^3 dilute sulfuric acid in cm^3	volume of 0.100 mol / dm^3 aqueous sodium hydroxide in cm^3
reaction 1	25.0	25.0
reaction 2		25.0

[1]

Downloaded from eduresourceza.com

Downloaded from eduresourceza.com

(c) Aqueous sodium hydrogen sulfate, $NaHSO_4(aq)$, contains the ions $Na^+(aq)$, $H^+(aq)$ and $SO_4^{2-}(aq)$.

Describe what you would **see** if the following experiments were done.

(i) A flame test was done on aqueous sodium hydrogen sulfate.

..... [1]

(ii) Solid copper(II) oxide was added to aqueous sodium hydrogen sulfate and the mixture was warmed.

.....

..... [2]

(d) A test can be done to show the presence of $SO_4^{2-}(aq)$ by adding acidified aqueous barium chloride **or** acidified aqueous barium nitrate.

(i) State the observation that would show that SO_4^{2-} is present.

..... [1]

(ii) Write an ionic equation for the reaction that occurs if SO_4^{2-} is present. Include state symbols.

..... [2]

[Total: 9]

Downloaded from eduresourceza.com

Downloaded from eduresourceza.com

7 Addition polymerisation and condensation polymerisation are two types of polymerisation.

(a) Which functional group is present in all the monomers which are used to make addition polymers?

..... [1]

(b) Part of an addition polymer is shown.

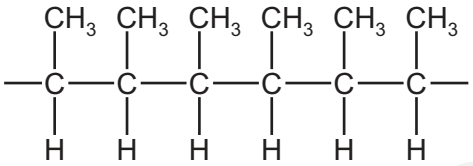

(i) How many monomer units are needed to make the part of the addition polymer shown?

..... [1]

(ii) Draw the structure of the monomer that is used to make this addition polymer. Show all of the atoms and all of the bonds.

Name the monomer.

name .....
[2]

(iii) State the empirical formula of:

the monomer .....

the polymer. .....
[2]

Downloaded from eduresourceza.com

Downloaded from eduresourceza.com

(c) Complex carbohydrates are natural condensation polymers. They can be broken down into colourless monomers which can then be separated and identified.

X is a complex carbohydrate.

Starting with a sample of **X**, describe how to produce, separate, detect and identify the monomers which make it up.

Your answer should include:
- the name of the process used to break down **X** into its monomers
- **two** types of substance that can be used to break down **X**
- the name of the process used to **separate** the monomers
- the method used to **detect** the monomers after they have been separated
- the method used to **identify** the monomers after they have been separated and detected.

.....

.....

.....

.....

.....

.....

.....

.....

.....

.....

.....

..... [6]

(d) Synthetic polyamides are condensation polymers.

(i) Name a synthetic polyamide.

..... [1]

(ii) Synthetic polyamides can be made by reacting carboxylic acids with amines.

Name the other substance that is produced in this reaction.

..... [1]

[Total: 14]

Downloaded from eduresourceza.com
© UCLES 2019

Downloaded from eduresourceza.com

BLANK PAGE

eduresourceza.com

Downloaded from eduresourceza.com

Downloaded from eduresourceza.com

BLANK PAGE

Permission to reproduce items where third-party owned material protected by copyright is included has been sought and cleared where possible. Every reasonable effort has been made by the publisher (UCLES) to trace copyright holders, but if any items requiring clearance have unwittingly been included, the publisher will be pleased to make amends at the earliest possible opportunity.

To avoid the issue of disclosure of answer-related information to candidates, all copyright acknowledgements are reproduced online in the Cambridge Assessment International Education Copyright Acknowledgements Booklet. This is produced for each series of examinations and is freely available to download at www.cambridgeinternational.org after the live examination series.

Cambridge Assessment International Education is part of the Cambridge Assessment Group. Cambridge Assessment is the brand name of the University of Cambridge Local Examinations Syndicate (UCLES), which itself is a department of the University of Cambridge.

Downloaded from eduresourceza.com

Downloaded from edureesource.com

The Periodic Table of Elements

Group

I	II											III	IV	V	VI	VII	VIII
							1 H hydrogen 1										2 He helium 4
3 Li lithium 7	4 Be beryllium 9											5 B boron 11	6 C carbon 12	7 N nitrogen 14	8 O oxygen 16	9 F fluorine 19	10 Ne neon 20
11 Na sodium 23	12 Mg magnesium 24											13 Al aluminium 27	14 Si silicon 28	15 P phosphorus 31	16 S sulfur 32	17 Cl chlorine 35.5	18 Ar argon 40
19 K potassium 39	20 Ca calcium 40	21 Sc scandium 45	22 Ti titanium 48	23 V vanadium 51	24 Cr chromium 52	25 Mn manganese 55	26 Fe iron 56	27 Co cobalt 59	28 Ni nickel 59	29 Cu copper 64	30 Zn zinc 65	31 Ga gallium 70	32 Ge germanium 73	33 As arsenic 75	34 Se selenium 79	35 Br bromine 80	36 Kr krypton 84
37 Rb rubidium 85	38 Sr strontium 88	39 Y yttrium 89	40 Zr zirconium 91	41 Nb niobium 93	42 Mo molybdenum 96	43 Tc technetium –	44 Ru ruthenium 101	45 Rh rhodium 103	46 Pd palladium 106	47 Ag silver 108	48 Cd cadmium 112	49 In indium 115	50 Sn tin 119	51 Sb antimony 122	52 Te tellurium 128	53 I iodine 127	54 Xe xenon 131
55 Cs caesium 133	56 Ba barium 137	57–71 lanthanoids	72 Hf hafnium 178	73 Ta tantalum 181	74 W tungsten 184	75 Re rhenium 186	76 Os osmium 190	77 Ir iridium 192	78 Pt platinum 195	79 Au gold 197	80 Hg mercury 201	81 Tl thallium 204	82 Pb lead 207	83 Bi bismuth 209	84 Po polonium –	85 At astatine –	86 Rn radon –
87 Fr francium –	88 Ra radium –	89–103 actinoids	104 Rf rutherfordium –	105 Db dubnium –	106 Sg seaborgium –	107 Bh bohrium –	108 Hs hassium –	109 Mt meitnerium –	110 Ds darmstadtium –	111 Rg roentgenium –	112 Cn copernicium –		114 Fl flerovium –		116 Lv livermorium –		

Key

atomic number
atomic symbol
name
relative atomic mass

lanthanoids	57 La lanthanum 139	58 Ce cerium 140	59 Pr praseodymium 141	60 Nd neodymium 144	61 Pm promethium –	62 Sm samarium 150	63 Eu europium 152	64 Gd gadolinium 157	65 Tb terbium 159	66 Dy dysprosium 163	67 Ho holmium 165	68 Er erbium 167	69 Tm thulium 169	70 Yb ytterbium 173	71 Lu lutetium 175
actinoids	89 Ac actinium –	90 Th thorium 232	91 Pa protactinium 231	92 U uranium 238	93 Np neptunium –	94 Pu plutonium –	95 Am americium –	96 Cm curium –	97 Bk berkelium –	98 Cf californium –	99 Es einsteinium –	100 Fm fermium –	101 Md mendelevium –	102 No nobelium –	103 Lr lawrencium –

The volume of one mole of any gas is 24 dm^3 at room temperature and pressure (r.t.p.).

Downloaded from edureesource.com