eduresourceza.com

Downloaded from eduresourceza.com

UNIVERSITY OF CAMBRIDGE INTERNATIONAL EXAMINATIONS
International General Certificate of Secondary Education

CANDIDATE NAME	

CENTRE NUMBER						CANDIDATE NUMBER				

* 1 9 1 3 9 9 3 2 8 4 *

CHEMISTRY **0620/23**

Paper 2 **October/November 2011**

1 hour 15 minutes

Candidates answer on the Question Paper.

No Additional Materials are required.

READ THESE INSTRUCTIONS FIRST

Write your Centre number, candidate number and name in the spaces at the top of this page.
Write in dark blue or black pen.
You may need to use a pencil for any diagrams, graphs or rough working.
Do not use staples, paper clips, highlighters, glue or correction fluid.
DO **NOT** WRITE IN ANY BARCODES.

Answer **all** questions.
A copy of the Periodic Table is printed on page 20.

At the end of the examination, fasten all your work securely together.
The number of marks is given in brackets [ ] at the end of each question or part question.

For Examiner's Use	
1	
2	
3	
4	
5	
6	
7	
Total	

This document consists of **19** printed pages and **1** blank page.

© UCLES 2011

UNIVERSITY of CAMBRIDGE International Examinations

Downloaded from eduresourceza.com

Downloaded from eduresourceza.com

For Examiner's Use

1 The diagram shows five different pieces of laboratory glassware, **A**, **B**, **C**, **D** and **E**.

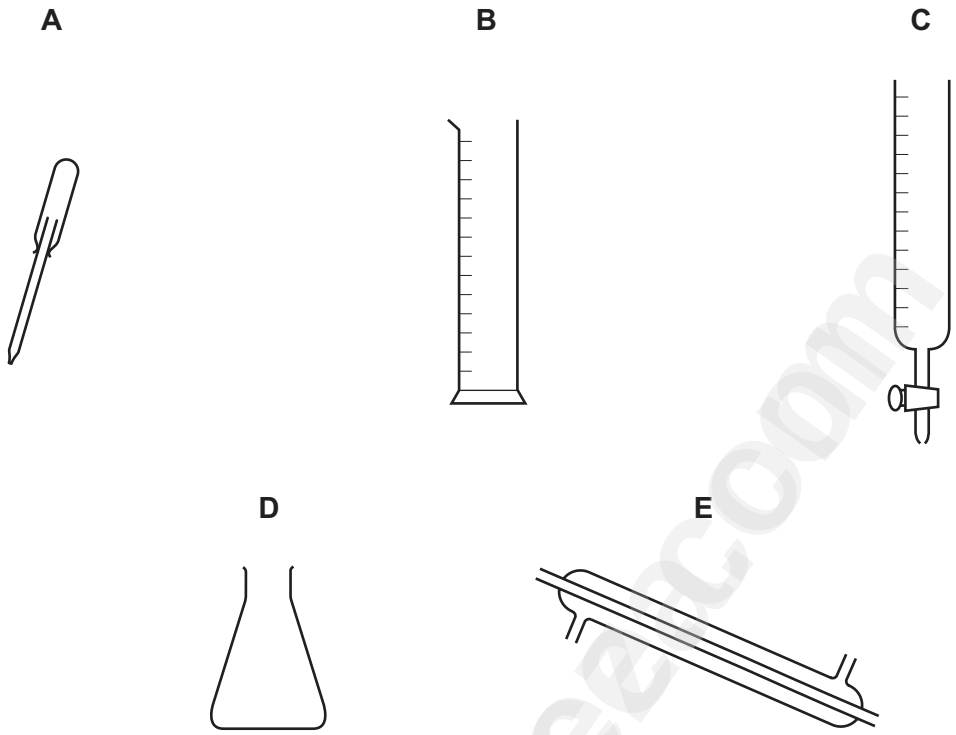

(a) Choose from **A**, **B**, **C**, **D** or **E** to answer the following questions.
Each letter may be used once, more than once or not at all.

Which piece of glassware is best used to

(i) measure out a volume of liquid accurately, ☐

(ii) place a spot of liquid on chromatography paper, ☐

(iii) condense a liquid with a low boiling point, ☐

(iv) shake two solutions together to mix them, ☐

(v) deliver a variable volume of solution when performing a titration? ☐

[5]

Downloaded from eduresourceza.com

Downloaded from eduresourceza.com

For Examiner's Use

(b) The diagram shows the apparatus used to prepare carbon dioxide in the laboratory.

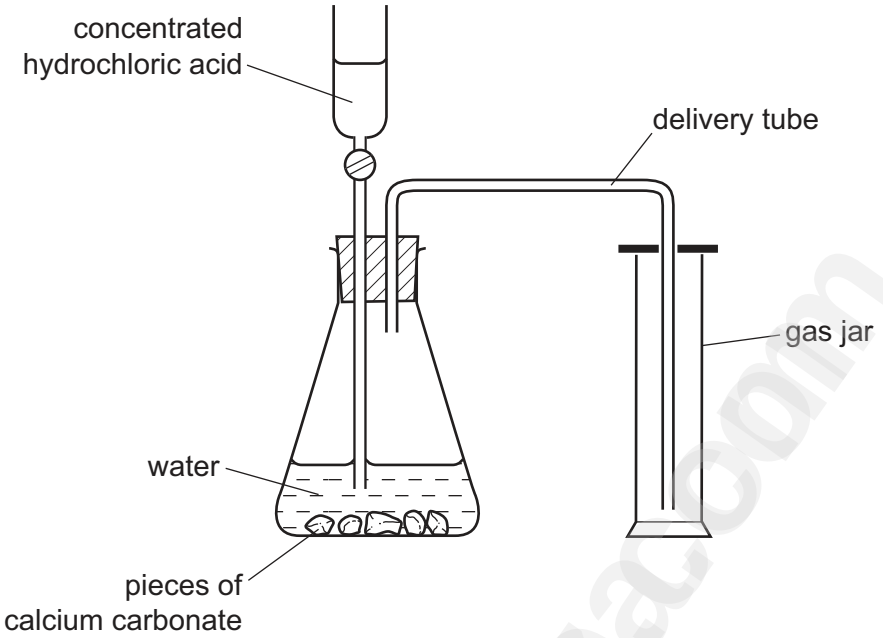

(i) State the name of a rock which is made up largely of calcium carbonate.

..... [1]

(ii) Which one of these statements about carbon dioxide is correct?
Tick **one** box.

Carbon dioxide is lighter than air.	☐
Carbon dioxide is a liquid at room temperature.	☐
Carbon dioxide is heavier than air.	☐
Carbon dioxide has the same density as air.	☐

[1]

(iii) Complete the equation for the reaction of calcium carbonate with hydrochloric acid.

$CaCO_3$ + ...HCl → $CaCl_2$ + CO_2 + ... [2]

[Total: 9]

Downloaded from eduresourceza.com

Downloaded from eduresourceza.com

For Examiner's Use

2 Many of the elements in the Periodic Table are metals.

(a) State **one** common use for each of the following metals.

(i) copper ..... [1]

(ii) platinum ..... [1]

(iii) aluminium ..... [1]

(b) Lead is a metal in Group IV of the Periodic Table.

(i) State **one** adverse effect of lead on health.

..... [1]

(ii) Lead has several isotopes.
One isotope of lead is

$$^{207}_{82}Pb$$

State the number of protons and neutrons in this isotope of lead.

number of protons ..... [1]

number of neutrons ..... [1]

(c) Sodium is a very reactive metal.

(i) A student added a few drops of litmus solution to a large beaker of water. She then dropped a small piece of sodium into the beaker.
Describe what the student would observe during the reaction.

.....

.....

..... [3]

(ii) Complete the word equation for the reaction of sodium with water.

sodium + water → ..... + ...

..... [2]

Downloaded from eduresourceza.com

Downloaded from eduresourceza.com

For Examiner's Use

(iii) Sodium chloride is formed when sodium burns in chlorine.
Sodium chloride is an ionic compound.
Complete the following sentences about this reaction using words from the list.

electron	**gains**	**ion**	**loses**
molecule	**negative**	**positive**	**proton**

When sodium burns in chlorine, each sodium atom loses an ..... and becomes a sodium ..... . Each chlorine atom ..... an electron and becomes a ..... ion. [4]

[Total: 15]

Downloaded from eduresourceza.com

Downloaded from eduresourceza.com

For Examiner's Use

3 Hydrogen peroxide decomposes slowly at room temperature to form water and oxygen. The reaction is catalysed by manganese(IV) oxide.

$$2H_2O_2 \rightarrow 2H_2O + O_2$$

A student used the apparatus shown below to study how changing the concentration of hydrogen peroxide affects the speed of this reaction.

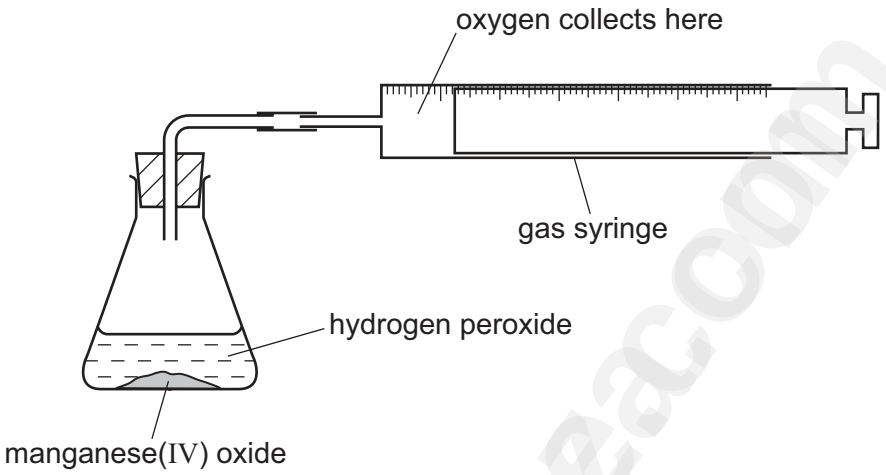

(a) Apart from the volume of hydrogen peroxide, state two things that the student must keep the same in each experiment.

1. .....

2. ..... [2]

Downloaded from eduresourceza.com

Downloaded from eduresourceza.com

For Examiner's Use

(b) The student measured the volume of oxygen produced using three different concentrations of hydrogen peroxide.
The results are shown on the graph below.

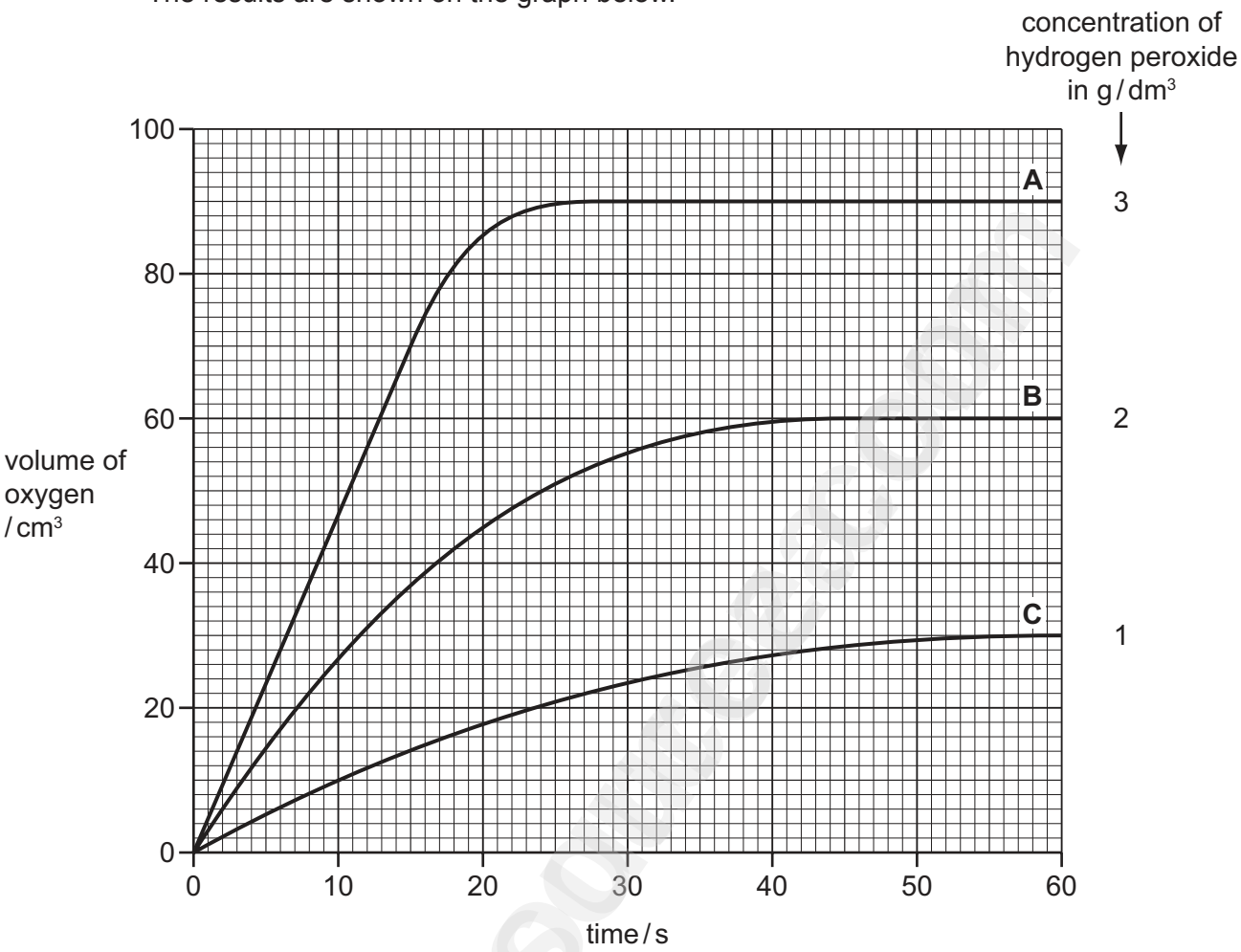

(i) Describe how the speed of the reaction varies with the concentration of hydrogen peroxide.

..... [1]

(ii) Explain why the final volume of oxygen given off is less for graph **B** than for graph **A**.

.....

..... [1]

(iii) From the graph, determine

the time taken for the reaction to be completed when 3 g / dm³ hydrogen peroxide (line **A**) was used.

..... [1]

the volume of oxygen produced by 2 g / dm³ hydrogen peroxide (line **B**) in the first 15 seconds.

..... [1]

Downloaded from eduresourceza.com

Downloaded from eduresourceza.com

For Examiner's Use

(c) The student then tested various compounds to see how well they catalysed the reaction. He used the same concentration of hydrogen peroxide in each experiment.
The table shows the time taken to produce 20 cm^3 of oxygen using each compound as a catalyst.

compound	time taken to produce 20 cm^3 of oxygen / s
copper(II) oxide	130
lead(IV) oxide	15
magnesium oxide	did not produce any oxygen
manganese(IV) oxide	18

Put these compounds in order of their effectiveness as catalysts.

worst catalyst ⟶ best catalyst

[1]

[Total: 7]

Downloaded from eduresourceza.com

Downloaded from eduresourceza.com

For Examiner's Use

4 Natural gas and the hydrocarbons obtained from the distillation of petroleum are important fuels.

(a) State the name of the main substance present in natural gas.

..... [1]

(b) Petroleum is a thick liquid.
Describe the liquid state in terms of

- how close the particles are to each other,
- the arrangement of the particles,
- the movement of the particles.

.....

.....

.....

..... [3]

(c) The diagram shows a distillation column used to separate petroleum into fractions.

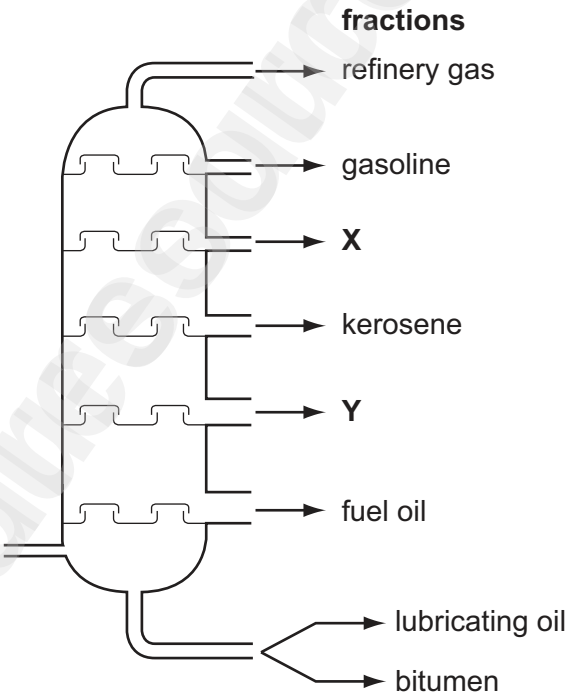

(i) On the diagram, draw an arrow to show where the petroleum vapour enters the column. [1]

(ii) What do you understand by the term *fraction*?

.....

..... [2]

Downloaded from eduresourceza.com

Downloaded from eduresourceza.com

For Examiner's Use

(iii) In the diagram on page 9, two fractions have not been named.
State the name of

fraction **X** .....

fraction **Y** ..... [2]

(iv) One of the refinery gases is ethane.
Draw the structure of ethane showing all atoms and bonds.

[1]

(v) Which one of these phrases describes ethane correctly?
Tick **one** box.

Ethane is an unsaturated hydrocarbon. ☐

Ethane is a saturated hydrocarbon. ☐

Ethane polymerises to form poly(ethene). ☐

Ethane is an alkene. ☐

[1]

[Total: 11]

Downloaded from eduresourceza.com

Downloaded from eduresourceza.com

For Examiner's Use

5 **(a)** Match the phrases on the left with the definitions on the right.
The first one has been done for you.

relative formula mass	an atom that has become charged
molecule	the smallest part of an element which can take part in a chemical change
atom	two or more atoms covalently bonded together
ion	the sum of the relative atomic masses in a compound

[3]

(b) Sodium hydroxide, NaOH, is an ionic compound which dissolves in water to form a strongly alkaline solution.

(i) Which **one** of the following best describes the pH of a concentrated aqueous solution of sodium hydroxide?
Put a ring around the correct answer.

pH 2 **pH 5** **pH 7** **pH 8** **pH 13** [1]

(ii) Calculate the relative formula mass of sodium hydroxide.

[1]

(iii) The equation describes how sodium hydroxide reacts with hydrochloric acid.

$$NaOH + HCl \rightarrow NaCl + H_2O$$

What type of chemical reaction is this?

..... [1]

Downloaded from eduresourceza.com

Downloaded from eduresourceza.com

For Examiner's Use

(iv) A student used a syringe to add 1 cm^3 portions of hydrochloric acid to an aqueous solution of sodium hydroxide.

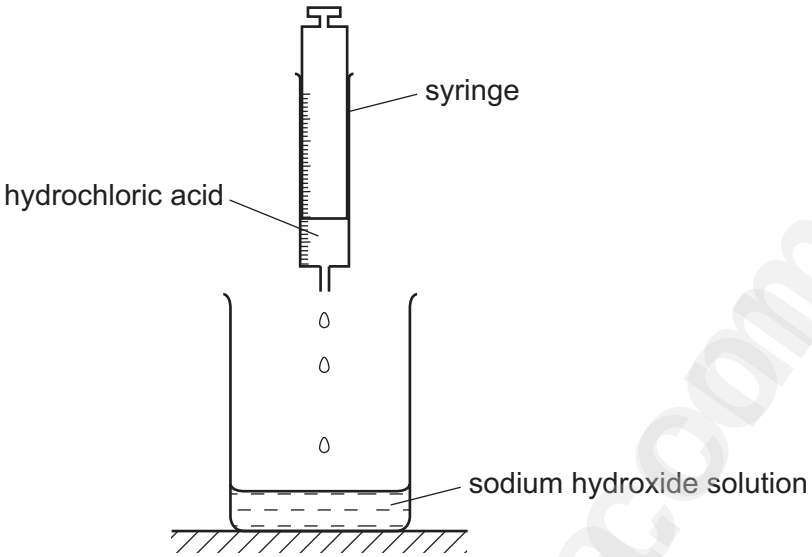

Describe how the pH of the solution in the beaker changes as the hydrochloric acid is added until the acid is in excess.

.....

.....

..... [2]

Downloaded from eduresourceza.com

Downloaded from eduresourceza.com

For Examiner's Use

(c) The diagram shows the apparatus used to electrolyse concentrated aqueous sodium chloride.

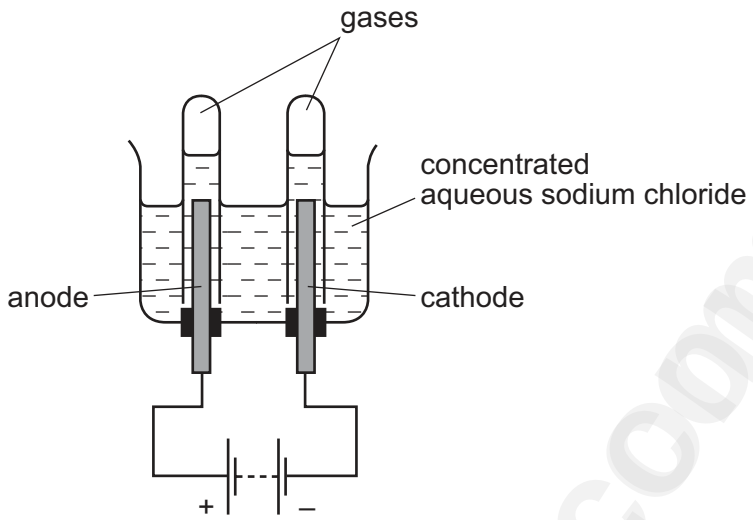

Give a description of this electrolysis.
In your description include

- what substance the electrodes are made from and the reason for using this substance
- what you would observe during the electrolysis
- the names of the substances produced at each electrode.

.....

.....

.....

.....

.....

.....

..... [6]

[Total: 14]

Downloaded from eduresourceza.com

Downloaded from eduresourceza.com

For Examiner's Use

6 When coal is heated in the absence of air, coke is formed together with a gas called coal gas and a liquid which contains ammonia.

(a) Coke is largely carbon.
State **one** use of coke in industry.

..... [1]

(b) Two other forms of carbon are diamond and graphite.

(i) Use your knowledge of the structure of diamond and graphite to explain

why graphite is a good lubricant.

.....

..... [1]

why diamond is very hard.

..... [1]

(ii) Give **one** use of diamond that depends on its hardness.

..... [1]

(c) The liquid which contains ammonia can be reacted with sulfuric acid.

(i) Complete the word equation for this reaction

ammonia + sulfuric acid → ..... [1]

(ii) Which **one** of the following elements do most fertilisers contain?
Put a ring around the correct answer.

chlorine **nitrogen** **sodium** **sulfur** [1]

(d) Coal gas contains methane.
Complete the diagram to show how the electrons are arranged in a molecule of methane.

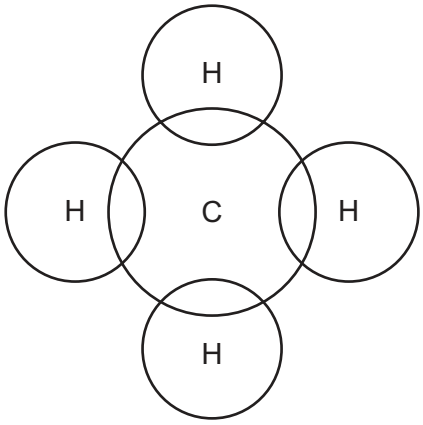

[1]

Downloaded from eduresourceza.com

Downloaded from eduresourceza.com

For Examiner's Use

(e) When coal is burnt, sulfur dioxide is given off.
Which two of the following statements about sulfur dioxide are correct?
Tick **two** boxes.

- Sulfur dioxide is an acidic oxide. ☐
- About 20 % of the air is sulfur dioxide. ☐
- Most of the sulfur dioxide in the air comes from car exhausts. ☐
- Sulfur dioxide contributes to acid rain. ☐

[2]

[Total: 9]

Downloaded from eduresourceza.com

Downloaded from eduresourceza.com

For Examiner's Use

7 Ethanol, C_2H_5OH, is a member of the alcohol homologous series.

(a) **(i)** Give **two** characteristics of a homologous series.

1. .....

2. ..... [2]

(ii) Draw the structure of ethanol showing all atoms and bonds.

[1]

(b) One use of ethanol is as a solvent.
A pupil studied the reaction of iodine with zinc.
She first dissolved a few crystals of iodine in ethanol and recorded the temperature of the solution.
The temperature was 18 °C.
She then added excess powdered zinc and recorded the temperature again.
The new temperature was 37 °C.

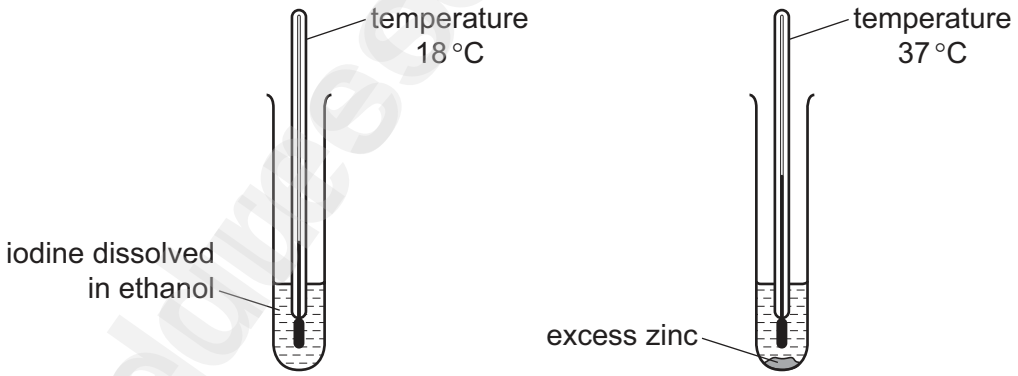

(i) Is this reaction endothermic or exothermic?
Explain your answer.

.....

..... [1]

(ii) What colour is solid iodine?

..... [1]

Downloaded from eduresourceza.com

Downloaded from eduresourceza.com

For Examiner's Use

(c) The equation for the reaction is

zinc + iodine → zinc iodide

When the reaction is complete, the mixture contains zinc iodide dissolved in ethanol and unreacted zinc powder.
Suggest how you can get crystals of zinc iodide from the reaction mixture.

.....

.....

..... [2]

(d) The diagram shows the structure of zinc iodide.

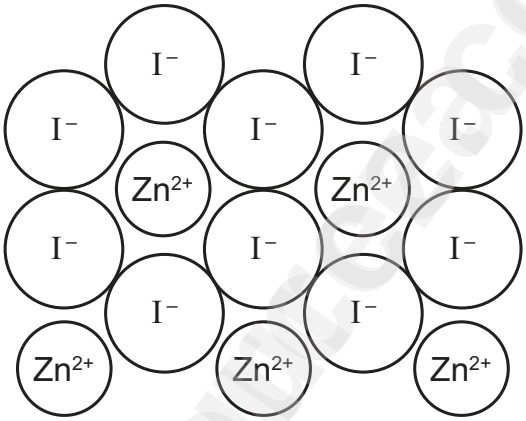

(i) What is the simplest formula for zinc iodide?

..... [1]

(ii) The list below shows four different types of structure.
What type of structure is zinc iodide?
Put a ring around the correct answer.

giant covalent

giant ionic

metallic

molecular

[1]

Downloaded from eduresourceza.com

Downloaded from eduresourceza.com

For Examiner's Use

(e) The equation for the reaction of zinc with dilute nitric acid is

$$4Zn + 10HNO_3 \rightarrow 4Zn(NO_3)_2 + NH_4NO_3 + 3H_2O$$

Write a word equation for this reaction.

..... [3]

(f) Describe a test for ammonium ions.

test .....

result .....

..... [3]

[Total: 15]

Downloaded from eduresourceza.com

Downloaded from eduresourceza.com

BLANK PAGE

Downloaded from eduresourceza.com

Downloaded from eduresourceza.com

DATA SHEET
The Periodic Table of the Elements

Group I	Group II											Group III	Group IV	Group V	Group VI	Group VII	Group 0
							1 H Hydrogen 1										4 He Helium 2
7 Li Lithium 3	9 Be Beryllium 4											11 B Boron 5	12 C Carbon 6	14 N Nitrogen 7	16 O Oxygen 8	19 F Fluorine 9	20 Ne Neon 10
23 Na Sodium 11	24 Mg Magnesium 12											27 Al Aluminium 13	28 Si Silicon 14	31 P Phosphorus 15	32 S Sulfur 16	35.5 Cl Chlorine 17	40 Ar Argon 18
39 K Potassium 19	40 Ca Calcium 20	45 Sc Scandium 21	48 Ti Titanium 22	51 V Vanadium 23	52 Cr Chromium 24	55 Mn Manganese 25	56 Fe Iron 26	59 Co Cobalt 27	59 Ni Nickel 28	64 Cu Copper 29	65 Zn Zinc 30	70 Ga Gallium 31	73 Ge Germanium 32	75 As Arsenic 33	79 Se Selenium 34	80 Br Bromine 35	84 Kr Krypton 36
85 Rb Rubidium 37	88 Sr Strontium 38	89 Y Yttrium 39	91 Zr Zirconium 40	93 Nb Niobium 41	96 Mo Molybdenum 42	Tc Technetium 43	101 Ru Ruthenium 44	103 Rh Rhodium 45	106 Pd Palladium 46	108 Ag Silver 47	112 Cd Cadmium 48	115 In Indium 49	119 Sn Tin 50	122 Sb Antimony 51	128 Te Tellurium 52	127 I Iodine 53	131 Xe Xenon 54
133 Cs Caesium 55	137 Ba Barium 56	139 La Lanthanum 57 *	178 Hf Hafnium 72	181 Ta Tantalum 73	184 W Tungsten 74	186 Re Rhenium 75	190 Os Osmium 76	192 Ir Iridium 77	195 Pt Platinum 78	197 Au Gold 79	201 Hg Mercury 80	204 Tl Thallium 81	207 Pb Lead 82	209 Bi Bismuth 83	Po Polonium 84	At Astatine 85	Rn Radon 86
Fr Francium 87	226 Ra Radium 88	227 Ac Actinium 89 †															

140 Ce Cerium 58	141 Pr Praseodymium 59	144 Nd Neodymium 60	Pm Promethium 61	150 Sm Samarium 62	152 Eu Europium 63	157 Gd Gadolinium 64	159 Tb Terbium 65	162 Dy Dysprosium 66	165 Ho Holmium 67	167 Er Erbium 68	169 Tm Thulium 69	173 Yb Ytterbium 70	175 Lu Lutetium 71
232 Th Thorium 90	Pa Protactinium 91	238 U Uranium 92	Np Neptunium 93	Pu Plutonium 94	Am Americium 95	Cm Curium 96	Bk Berkelium 97	Cf Californium 98	Es Einsteinium 99	Fm Fermium 100	Md Mendelevium 101	No Nobelium 102	Lr Lawrencium 103

*58-71 Lanthanoid series
†90-103 Actinoid series

Key

a X b	a = relative atomic mass X = atomic symbol b = proton (atomic) number

The volume of one mole of any gas is 24 dm^3 at room temperature and pressure (r.t.p.).

Permission to reproduce items where third-party owned material protected by copyright is included has been sought and cleared where possible. Every reasonable effort has been made by the publisher (UCLES) to trace copyright holders, but if any items requiring clearance have unwittingly been included the publisher will be pleased to make amends at the earliest possible opportunity.

University of Cambridge International Examinations is part of the Cambridge Assessment Group. Cambridge Assessment is the brand name of University of Cambridge Local Examinations Syndicate (UCLES) which is itself a department of the University of Cambridge.

© UCLES 2011

Downloaded from eduresourceza.com