eduresourceza.com

Downloaded from eduresourceza.com

UNIVERSITY OF CAMBRIDGE INTERNATIONAL EXAMINATIONS
International General Certificate of Secondary Education

CANDIDATE NAME	

CENTRE NUMBER						CANDIDATE NUMBER				

* 4 3 0 8 3 1 5 3 8 5 *

CHEMISTRY **0620/21**

Paper 2 **October/November 2010**

1 hour 15 minutes

Candidates answer on the Question Paper.

No Additional Materials are required.

READ THESE INSTRUCTIONS FIRST

Write your Centre number, candidate number and name in the spaces at the top of this page.
Write in dark blue or black pen.
You may need to use a pencil for any diagrams, graphs or rough working.
Do not use staples, paper clips, highlighters, glue or correction fluid.
DO **NOT** WRITE IN ANY BARCODES.

Answer **all** questions.
A copy of the Periodic Table is printed on page 20.

At the end of the examination, fasten all your work securely together.
The number of marks is given in brackets [ ] at the end of each question or part question.

For Examiner's Use	
1	
2	
3	
4	
5	
6	
7	
8	
Total	

This document consists of **17** printed pages and **3** blank pages.

© UCLES 2010

UNIVERSITY of CAMBRIDGE International Examinations

Downloaded from eduresourceza.com

Downloaded from eduresourceza.com

For Examiner's Use

1 The diagram below shows the elements in a period of the Periodic Table.

Li	**Be**	**B**	**C**	**N**	**O**	**F**	**Ne**

(a) To which period of the Periodic Table do these elements belong?

..... [1]

(b) Answer these questions using only the elements shown in the diagram.
Each element can be used once, more than once or not at all.

Write down the symbol for the element which

(i) has six electrons in its outer shell. .....

(ii) is a halogen. .....

(iii) is a metal which reacts rapidly with cold water. .....

(iv) has two forms, graphite and diamond. .....

(v) is in Group II of the Periodic Table. .....

(vi) makes up about 80 % of the air. ..... [6]

(c) Complete the following sentence using words from the list below.

atoms **electrons** **molecules** **neutrons** **protons**

The ..... of the elements in the Periodic Table are arranged in order of increasing number of ..... . [2]

[Total: 9]

Downloaded from eduresourceza.com

Downloaded from eduresourceza.com

For Examiner's Use

2 Calcium carbonate was heated strongly in a test-tube.
The gas given off was bubbled through limewater.

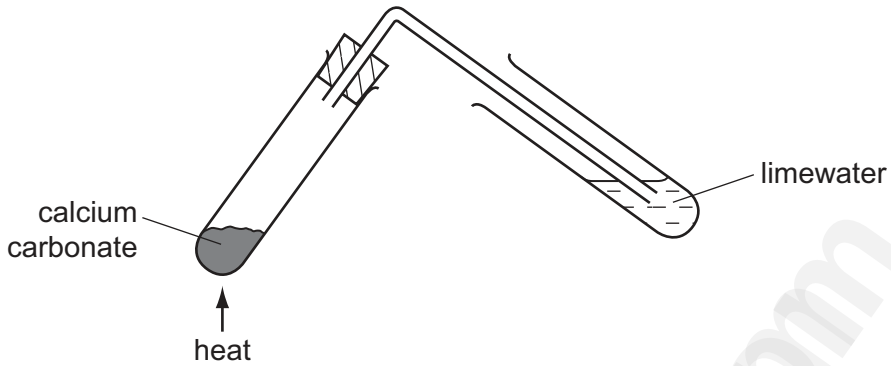

(a) What type of chemical reaction occurs when calcium carbonate is heated strongly?

Put a ring around the correct answer.

hydration

neutralisation

oxidation

thermal decomposition

[1]

(b) **(i)** State the name of the gas given off when calcium carbonate is heated strongly.

..... [1]

(ii) State the colour change of the limewater.

..... [1]

(c) The product remaining in the test-tube is calcium oxide.

(i) Calcium oxide is used in steelmaking.
Describe how and why calcium oxide is used in making steel.

.....

.....

..... [2]

(ii) Steel is an alloy. What do you understand by the term *alloy*?

.....

..... [1]

Downloaded from eduresourceza.com

Downloaded from eduresourceza.com

For Examiner's Use

(iii) Give **one** other use of calcium oxide.

..... [1]

(iv) Complete the symbol equation for the reaction of calcium oxide with hydrochloric acid.

$$CaO + \text{.....}HCl \rightarrow CaCl_2 + \text{.....}$$ [2]

(v) State the chemical name of the compound $CaCl_2$.

..... [1]

[Total: 10]

Downloaded from eduresourceza.com

Downloaded from eduresourceza.com

For Examiner's Use

3 Helium and argon are noble gases.

(a) State **one** use of helium.

..... [1]

(b) The atomic structures of helium and argon are shown below.

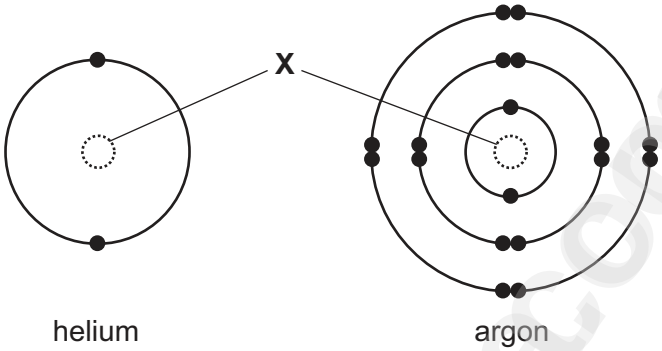

(i) State the name of the central part of the atom, labelled **X**.

..... [1]

(ii) Which statement about helium and argon is correct?

Tick **one** box.

Argon has an incomplete inner shell of electrons. ☐

An atom of argon has 16 electrons. ☐

Helium has a complete outer shell of electrons. ☐

Helium has an incomplete outer shell of electrons. ☐

[1]

(iii) How many protons are there in an atom of argon?

..... [1]

(iv) The symbol for a particular isotope of helium is written as $^{4}_{2}He$.

Write a similar symbol for the isotope of argon which has 16 neutrons.

[1]

Downloaded from eduresourceza.com

Downloaded from eduresourceza.com

For Examiner's Use

(c) Argon is a liquid at a temperature of –188 °C.
Complete the diagram below to show how the atoms of argon are arranged at –188 °C.

◯ represents one atom of argon.

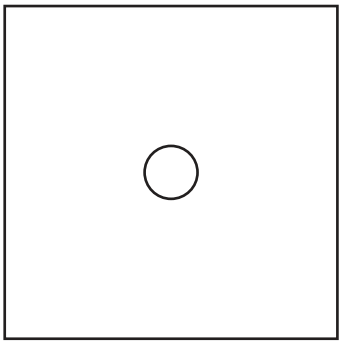

[2]

[Total: 7]

Downloaded from eduresourceza.com

Downloaded from eduresourceza.com

For Examiner's Use

4 The table shows the mass of some ions present in a 500 cm^3 bottle of mineral water.

name of ion	symbol	mass of ion / mg
calcium	Ca^{2+}	40.5
	Cl^-	8.1
magnesium	Mg^{2+}	11.6
nitrate	NO_3^-	2.4
potassium	K^+	0.9
	SO_4^{2-}	6.4

(a) State the name of the following ions.

Cl^- .....

SO_4^{2-} ..... [2]

(b) Calculate the mass of magnesium ions in 100 cm^3 of this mineral water.

[1]

(c) **(i)** Describe a test for nitrate ions.

.....

..... [2]

(ii) The gas produced in this test turns damp red litmus paper blue.
State the name of this gas.

..... [1]

Downloaded from eduresourceza.com

Downloaded from eduresourceza.com

For Examiner's Use

(d) The apparatus shown is used to get pure water from impure mineral water.

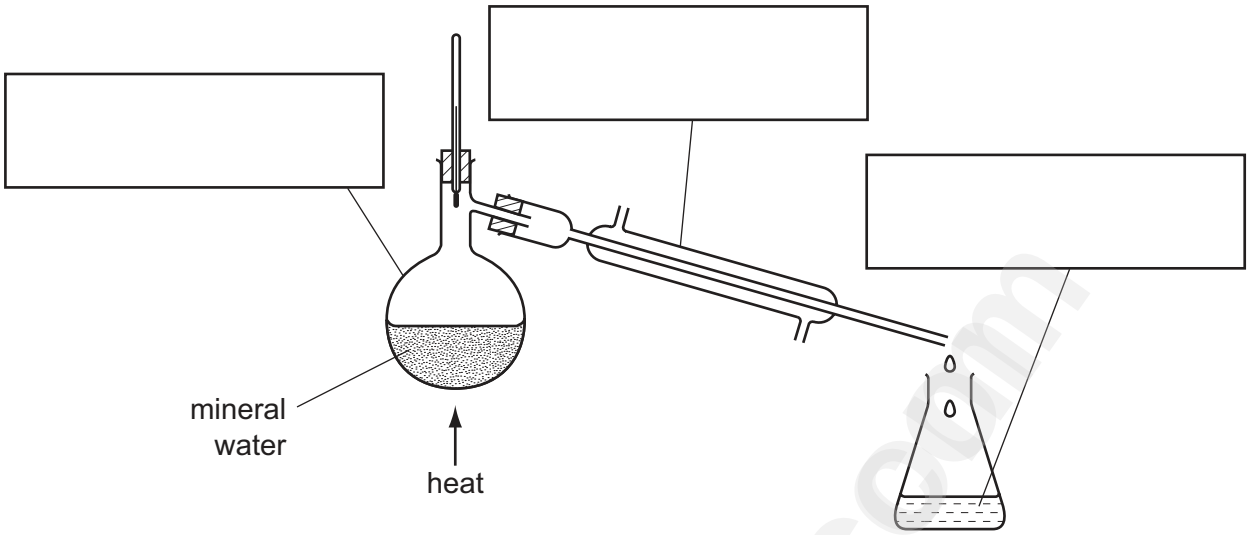

(i) Complete the diagram by putting the correct labels in the three boxes. [3]

(ii) Describe how this apparatus separates pure water from dissolved ionic solids.

.....

.....

..... [2]

(iii) Water purity is important in everyday life.
Describe **one** other area of everyday life where purity of substances is important.

..... [1]

[Total: 12]

Downloaded from eduresourceza.com

Downloaded from eduresourceza.com

For Examiner's Use

5 A solution of calcium hydroxide in water is alkaline.

(a) Which **one** of the pH values below is alkaline?
Put a ring around the correct answer.

pH 3 **pH 6** **pH 7** **pH 11** [1]

(b) Which of the following is the common name for calcium hydroxide?
Tick **one** box.

cement ☐
limestone ☐
quicklime ☐
slaked lime ☐

[1]

(c) Some farmers use calcium hydroxide to control soil acidity.

(i) Why is it important to control soil acidity?

..... [1]

(ii) Acid rain can cause soil to become acidic.
Describe how acid rain is formed.

.....

.....

.....

..... [3]

(d) Calcium hydroxide reacts with hydrochloric acid.

calcium hydroxide + hydrochloric acid → calcium chloride + water

(i) State the name of this type of chemical reaction.

..... [1]

Downloaded from eduresourceza.com

Downloaded from eduresourceza.com

For Examiner's Use

(ii) A dilute solution of calcium hydroxide can be titrated with hydrochloric acid using the apparatus shown.

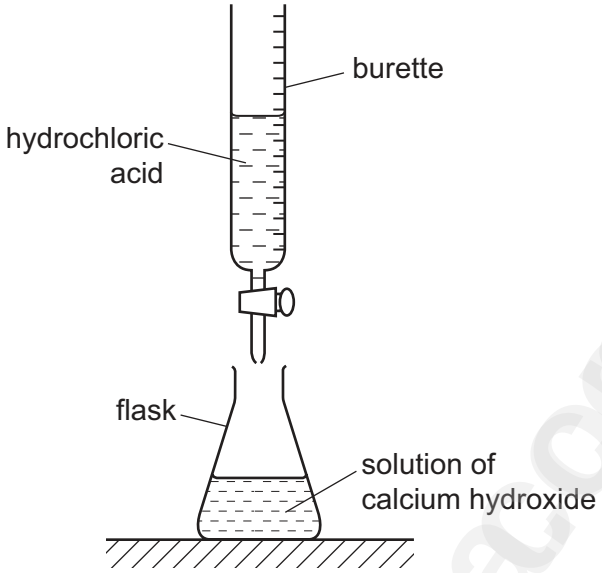

Describe how you would carry out this titration.

.....

.....

.....

..... [3]

[Total: 10]

Downloaded from eduresourceza.com

Downloaded from eduresourceza.com

For Examiner's Use

6 Iron is extracted from its ore by reduction with carbon. Aluminium is extracted from its ore by electrolysis.

(a) **(i)** State the name of an ore of aluminium.

..... [1]

(ii) What do you understand by the term *reduction*?

..... [1]

(iii) Suggest why aluminium is **not** extracted from its ore by reduction with carbon.

..... [1]

(b) The table gives information about the reduction of four different metal oxides by heating with carbon.

metal oxide	reduction conditions
lead(II) oxide	reduced very easily using a Bunsen burner
magnesium oxide	reduced with difficulty in a furnace above 2000 °C
nickel(II) oxide	reduced very easily in a furnace above 680 °C
zinc oxide	reduced fairly easily in a furnace above 1200 °C

Use the information in the table to suggest the order of reactivity of these metals.

least reactive ⟶ most reactive

[2]

(c) Zinc powder reacts with hydrochloric acid.
The speed of reaction can be followed by measuring the volume of hydrogen gas produced per minute.

What happens to the volume of gas produced per minute when

(i) large lumps of zinc are used instead of zinc powder?

..... [1]

(ii) the reaction is carried out at a higher temperature?

..... [1]

Downloaded from eduresourceza.com

Downloaded from eduresourceza.com

For Examiner's Use

(d) Match the metals on the left with their uses on the right.
The first one has been done for you.

nickel	electrical wiring
copper	making coins
aluminium	chemical plant
mild steel	car bodies
stainless steel	aircraft bodies

[4]

[Total: 11]

Downloaded from eduresourceza.com

Downloaded from eduresourceza.com

For Examiner's Use

7 Ethene, C_2H_4, is manufactured by cracking petroleum fractions.

(a) **(i)** What do you understand by the term *petroleum fraction*?

.....

..... [1]

(ii) Complete the equation for the manufacture of ethene from dodecane, $C_{12}H_{26}$.

$$C_{12}H_{26} \rightarrow C_2H_4 + \text{.....}$$ [1]

(b) Two fractions obtained from the distillation of petroleum are refinery gas and gasoline. State **one** use of each of these fractions.

refinery gas .....

gasoline ..... [2]

(c) Ethene is an unsaturated hydrocarbon.
What do you understand by the following terms?

unsaturated .....

hydrocarbon ..... [2]

(d) Ethene is used to make ethanol.

(i) Which of these reactions is used to make ethanol from ethene?
Tick **one** box.

- catalytic addition of steam ☐
- fermentation ☐
- oxidation using oxygen ☐
- reduction using hydrogen ☐

[1]

Downloaded from eduresourceza.com

Downloaded from eduresourceza.com

For Examiner's Use

(ii) Draw the structure of ethanol showing all atoms and bonds.

[2]

(e) Ethene is used to make poly(ethene).
Complete the following sentences about this reaction.
Use words from the list below.

additions **carbohydrates** **catalysts** **monomers** **polymers**

The ethene molecules which join to form poly(ethene) are the ..... .

The poly(ethene) molecules formed are ..... . [2]

[Total: 11]

Downloaded from eduresourceza.com

Downloaded from eduresourceza.com

For Examiner's Use

8 Lead(II) bromide can be electrolysed using the apparatus shown below.

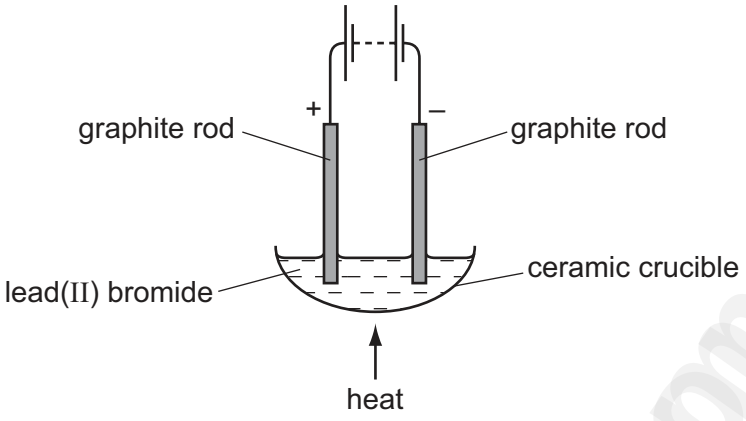

(a) Choose **one** word from the list below which describes the graphite rods.
Put a ring around the correct answer.

cations **electrodes** **electrons** **insulators** **metals** [1]

(b) State the name of the products formed during this electrolysis at

the negative graphite rod. .....

the positive graphite rod. ..... [2]

(c) Which of the following conduct electricity?
Tick **two** boxes.

ceramic crucible	☐
graphite rod	☐
molten lead(II) bromide	☐
solid lead(II) bromide	☐

[2]

Downloaded from eduresourceza.com

Downloaded from eduresourceza.com

For Examiner's Use

(d) The structure of lead(II) bromide is shown below.

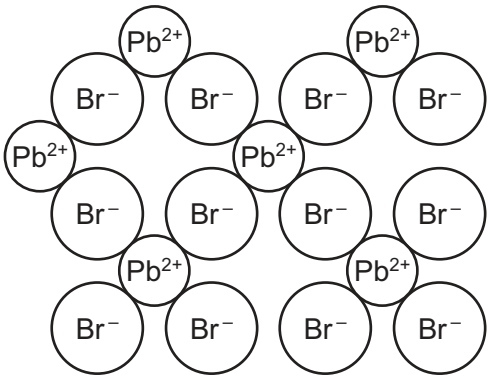

Write the simplest formula for lead(II) bromide.

..... [1]

(e) Lead(II) bromide is formed as a precipitate when aqueous solutions of lead(II) nitrate and potassium bromide are mixed.

(i) What do you understand by the term *precipitate*?

.....

..... [1]

(ii) The formula of lead(II) nitrate is $Pb(NO_3)_2$.
State the number of different types of atom present in this formula.

..... [1]

(iii) State the total number of oxygen atoms present in this formula.

..... [1]

(iv) Lead compounds are pollutants in the air.
State one harmful effect of lead compounds on health.

..... [1]

[Total: 10]

Downloaded from eduresourceza.com

Downloaded from eduresourceza.com

BLANK PAGE

Downloaded from eduresourceza.com

Downloaded from eduresourceza.com

BLANK PAGE

Downloaded from eduresourceza.com

Downloaded from eduresourceza.com

BLANK PAGE

Downloaded from eduresourceza.com

Downloaded from eduresourceza.com

DATA SHEET
The Periodic Table of the Elements

Group I	Group II											Group III	Group IV	Group V	Group VI	Group VII	Group 0
							1 **H** Hydrogen 1										4 **He** Helium 2
7 **Li** Lithium 3	9 **Be** Beryllium 4											11 **B** Boron 5	12 **C** Carbon 6	14 **N** Nitrogen 7	16 **O** Oxygen 8	19 **F** Fluorine 9	20 **Ne** Neon 10
23 **Na** Sodium 11	24 **Mg** Magnesium 12											27 **Al** Aluminium 13	28 **Si** Silicon 14	31 **P** Phosphorus 15	32 **S** Sulfur 16	35.5 **Cl** Chlorine 17	40 **Ar** Argon 18
39 **K** Potassium 19	40 **Ca** Calcium 20	45 **Sc** Scandium 21	48 **Ti** Titanium 22	51 **V** Vanadium 23	52 **Cr** Chromium 24	55 **Mn** Manganese 25	56 **Fe** Iron 26	59 **Co** Cobalt 27	59 **Ni** Nickel 28	64 **Cu** Copper 29	65 **Zn** Zinc 30	70 **Ga** Gallium 31	73 **Ge** Germanium 32	75 **As** Arsenic 33	79 **Se** Selenium 34	80 **Br** Bromine 35	84 **Kr** Krypton 36
85 **Rb** Rubidium 37	88 **Sr** Strontium 38	89 **Y** Yttrium 39	91 **Zr** Zirconium 40	93 **Nb** Niobium 41	96 **Mo** Molybdenum 42	**Tc** Technetium 43	101 **Ru** Ruthenium 44	103 **Rh** Rhodium 45	106 **Pd** Palladium 46	108 **Ag** Silver 47	112 **Cd** Cadmium 48	115 **In** Indium 49	119 **Sn** Tin 50	122 **Sb** Antimony 51	128 **Te** Tellurium 52	127 **I** Iodine 53	131 **Xe** Xenon 54
133 **Cs** Caesium 55	137 **Ba** Barium 56	139 **La** Lanthanum 57 *	178 **Hf** Hafnium 72	181 **Ta** Tantalum 73	184 **W** Tungsten 74	186 **Re** Rhenium 75	190 **Os** Osmium 76	192 **Ir** Iridium 77	195 **Pt** Platinum 78	197 **Au** Gold 79	201 **Hg** Mercury 80	204 **Tl** Thallium 81	207 **Pb** Lead 82	209 **Bi** Bismuth 83	**Po** Polonium 84	**At** Astatine 85	**Rn** Radon 86
Fr Francium 87	226 **Ra** Radium 88	227 **Ac** Actinium 89 †															

140 **Ce** Cerium 58	141 **Pr** Praseodymium 59	144 **Nd** Neodymium 60	**Pm** Promethium 61	150 **Sm** Samarium 62	152 **Eu** Europium 63	157 **Gd** Gadolinium 64	159 **Tb** Terbium 65	162 **Dy** Dysprosium 66	165 **Ho** Holmium 67	167 **Er** Erbium 68	169 **Tm** Thulium 69	173 **Yb** Ytterbium 70	175 **Lu** Lutetium 71
232 **Th** Thorium 90	**Pa** Protactinium 91	238 **U** Uranium 92	**Np** Neptunium 93	**Pu** Plutonium 94	**Am** Americium 95	**Cm** Curium 96	**Bk** Berkelium 97	**Cf** Californium 98	**Es** Einsteinium 99	**Fm** Fermium 100	**Md** Mendelevium 101	**No** Nobelium 102	**Lr** Lawrencium 103

*58-71 Lanthanoid series
†90-103 Actinoid series

Key

a **X** b	a = relative atomic mass **X** = atomic symbol b = proton (atomic) number

The volume of one mole of any gas is 24 dm^3 at room temperature and pressure (r.t.p.).

Permission to reproduce items where third-party owned material protected by copyright is included has been sought and cleared where possible. Every reasonable effort has been made by the publisher (UCLES) to trace copyright holders, but if any items requiring clearance have unwittingly been included the publisher will be pleased to make amends at the earliest possible opportunity.

University of Cambridge International Examinations is part of the Cambridge Assessment Group. Cambridge Assessment is the brand name of University of Cambridge Local Examinations Syndicate (UCLES) which is itself a department of the University of Cambridge.

© UCLES 2010

Downloaded from eduresourceza.com