eduresourceza.com

Downloaded from eduresourceza.com

www.XtremePapers.com

Location Entry Codes

As part of CIE's continual commitment to maintaining best practice in assessment, CIE uses different variants of some question papers for our most popular assessments with large and widespread candidature. The question papers are closely related and the relationships between them have been thoroughly established using our assessment expertise. All versions of the paper give assessment of equal standard.

The content assessed by the examination papers and the type of questions is unchanged.

This change means that for this component there are now two variant Question Papers, Mark Schemes and Principal Examiner's Reports where previously there was only one. For any individual country, it is intended that only one variant is used. This document contains both variants which will give all Centres access to even more past examination material than is usually the case.

The diagram shows the relationship between the Question Papers, Mark Schemes and Principal Examiners' Reports that are available.

Question Paper	Mark Scheme	Principal Examiner's Report
Introduction	Introduction	Introduction
First variant Question Paper	First variant Mark Scheme	First variant Principal Examiner's Report
Second variant Question Paper	Second variant Mark Scheme	Second variant Principal Examiner's Report

Who can I contact for further information on these changes?
Please direct any questions about this to CIE's Customer Services team at:
international@cie.org.uk

The titles for the variant items should correspond with the table above, so that at the top of the first page of the relevant part of the document and on the header, it has the words:

- First variant Question Paper / Mark Scheme / Principal Examiner's Report

or

- Second variant Question Paper / Mark Scheme / Principal Examiner's Report

as appropriate.

Downloaded from eduresourceza.com

Down First Variant Question Paper ceza.com

UNIVERSITY OF CAMBRIDGE INTERNATIONAL EXAMINATIONS
International General Certificate of Secondary Education

CANDIDATE NAME

CENTRE NUMBER

CANDIDATE NUMBER

8516461728

BIOLOGY **0610/31**

Paper 3 Extended **May/June 2008**

1 hour 15 minutes

Candidates answer on the Question Paper.

No Additional Materials are required.

READ THESE INSTRUCTIONS FIRST

Write your Centre number, Candidate number and name on all the work you hand in.
Write in dark blue or black pen.
You may use a pencil for any diagrams or graphs.
Do not use staples, paper clips, highlighters, glue or correction fluid.
DO **NOT** WRITE IN ANY BARCODES.

Answer **all** questions.
At the end of the examination, fasten all your work securely together.
The number of marks is given in brackets [ ] at the end of each question or part question.

For Examiner's Use	
1	
2	
3	
4	
5	
Total	

This document consists of **13** printed pages and **3** blank pages.

© UCLES 2008

UNIVERSITY of CAMBRIDGE International Examinations

Downloaded from edurescourceza.com

Downloaded from eduresourceza.com

For Examiner's Use

1 **(a)** Using straight lines, match the names of the flower parts with their functions. One has been completed for you.

anther	allows the passage of the pollen tube to the ovary
petal	attracts insects for pollination
sepal	produces pollen grains
style	protects the flower when in bud
stigma	the surface on which the pollen lands during pollination

[4]

(b) Describe how the stigmas of wind-pollinated flowers differ from the stigmas of insect-pollinated flowers. Relate these differences to the use of wind as the pollinating agent.

.....

.....

.....

.....

..... [3]

(c) Discuss the implications to a species of self-pollination.

.....

.....

.....

..... [3]

[Total: 10]

© UCLES 2008
Downloaded from eduresourceza.com

Downloaded from eduresourceza.com

For Examiner's Use

2 The wild dog is one of the smaller African carnivorous mammals. It has disappeared from 25 of the 39 countries where it used to live. Wild dogs hunt in packs, feeding on antelopes, which are grass-eating mammals.

A conservation programme has been started to increase the wild dog population in South Africa. Farmers are worried about numbers getting out of control because wild dogs breed at a very fast rate. However, conservationists are not concerned because the lion is a natural predator of the dogs.

(a) Wild dogs are carnivorous mammals.

(i) Define the term *carnivore*.

..... [1]

(ii) State **one** external feature which distinguishes mammals from other vertebrates.

..... [1]

(b) **(i)** Suggest two reasons why numbers of African wild dogs are decreasing.

1. .....

2. ..... [2]

(ii) Suggest what could happen to the species if numbers continue to decrease.

.....

..... [1]

(c) Using the information in the passage above, construct a food chain for a wild dog, including its predator.

Label each organism with its trophic level.

[4]

Downloaded from eduresourceza.com

Downloaded from eduresourceza.com

For Examiner's Use

(d) It is important that the wild dog species is conserved.

(i) Explain the meaning of the term *conservation.*

.....

.....

..... [2]

(ii) Outline the measures that could be taken to conserve a mammal, such as the wild dog.

.....

.....

.....

.....

..... [3]

(e) When wild dogs die, nitrogen compounds in their bodies may become available for plants. Outline the processes that occur to make these nitrogen compounds in the bodies of dead animals available for plants to absorb.

.....

.....

.....

.....

.....

.....

.....

..... [5]

[Total: 19]

© UCLES 2008
Downloaded from eduresourceza.com

Downloaded from eduresourceza.com

For Examiner's Use

3 Catalase is an enzyme found in plant and animal cells. It has the function of breaking down hydrogen peroxide, a toxic waste product of metabolic processes.

(a) (i) State the term used to describe the removal of waste products of metabolism.

..... [1]

(ii) Define the term *enzyme*.

.....

..... [2]

An investigation was carried out to study the effect of pH on catalase, using pieces of potato as a source of the enzyme.

Oxygen is formed when catalase breaks down hydrogen peroxide, as shown in the equation.

$$\text{hydrogen peroxide} \xrightarrow{\text{catalase}} \text{water} + \text{oxygen}$$

The rate of reaction can be found by measuring how long it takes for 10 cm^3 oxygen to be collected.

(b) (i) State the independent (input) variable in this investigation.

..... [1]

(ii) Suggest two factors that would need to be kept constant in this investigation.

1. .....

2. ..... [2]

Downloaded from eduresourceza.com

Downloaded from eduresourceza.com

For Examiner's Use

Table 3.1 shows the results of the investigation, but it is incomplete.

Table 3.1

pH	time to collect 10 cm^3 oxygen / min	rate of oxygen production / cm^3 min^{-1}
4	20.0	0.50
5	12.5	0.80
6	10.0	1.00
7	13.6	0.74
8	17.4	

(c) Calculate the rate of oxygen production at pH 8.

Show your working. Write your answer in Table 3.1

[2]

© UCLES 2008
Downloaded from eduresourceza.com

Downloaded from eduresourceza.com

For Examiner's Use

(d) Complete the graph by plotting the rate of oxygen production against pH.

[4]

(e) **(i)** Using data from the graph, describe the changes in the reaction rate between **pH 4** and **pH 8**.

.....

.....

..... [2]

(ii) Explain the change in the reaction rate between **pH 6** and **pH 8**.

.....

.....

.....

..... [3]

[Total: 17]

Downloaded from eduresourceza.com

Downloaded from eduresourceza.com

For Examiner's Use

4 Fig. 4.1 shows three species of zebra.

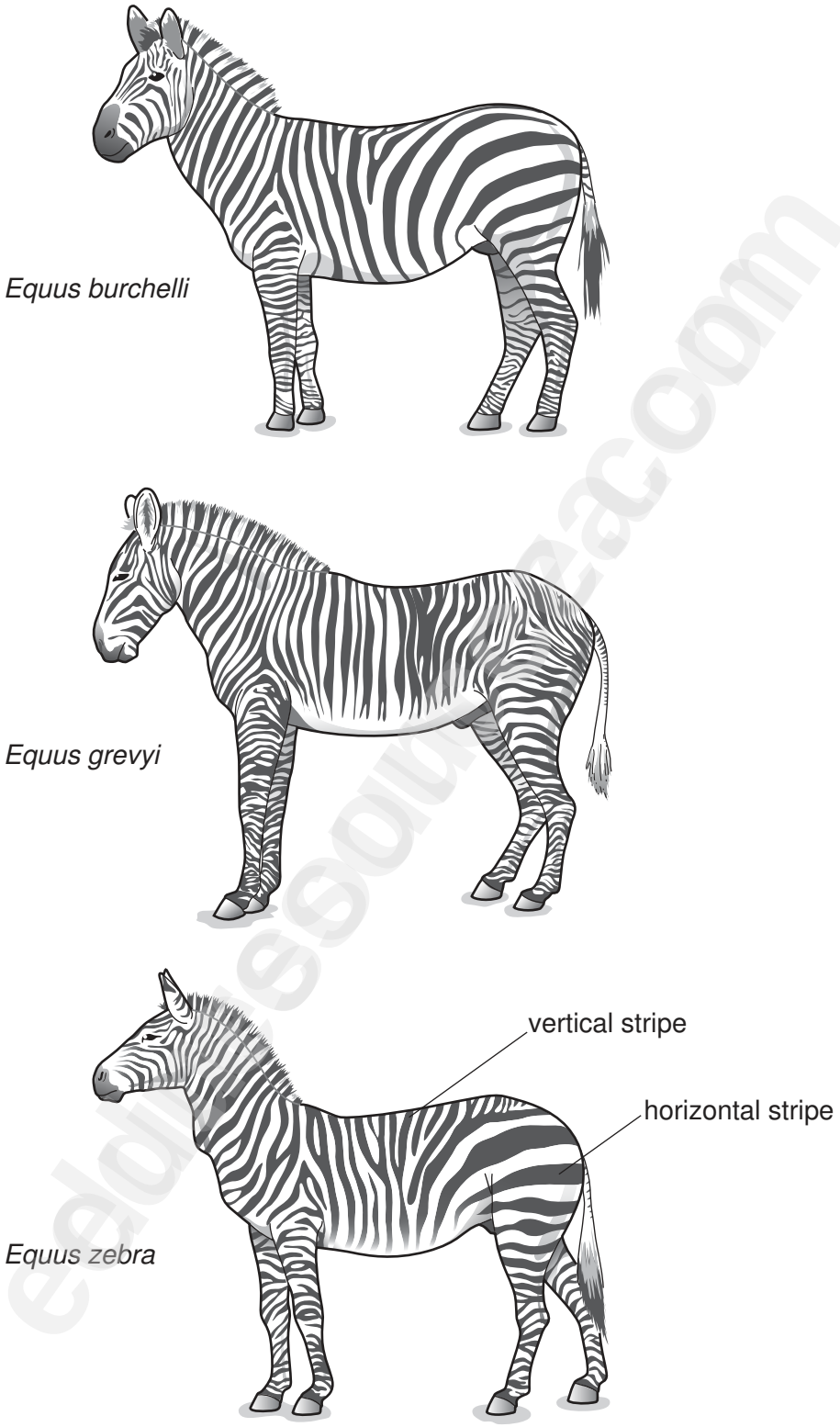

Fig. 4.1

© UCLES 2008
Downloaded from eduresourceza.com

Downloaded from eduresourceza.com

For Examiner's Use

(a) Describe **one** method a scientist could use to show that the zebras shown in Fig. 4.1 are different species.

.....

..... [1]

(b) Studies have shown that the hotter the environment, the more stripes zebras have.

(i) State the type of variation which would result in different numbers of stripes.

..... [1]

(ii) Study Fig. 4.1. Suggest which species of zebra lives in the hottest environment.

..... [1]

(c) Occasionally, zebras are born that are almost completely black. The change in appearance is the result of mutation.

(i) State the term that is used to describe the appearance of an organism.

..... [1]

(ii) Define the term *mutation*.

.....

..... [2]

Downloaded from eduresourceza.com

Downloaded from eduresourceza.com

For Examiner's Use

(d) Tsetse flies attack animals with short fur, sucking their blood and spreading diseases.

Fig. 4.2 shows a tsetse fly. This fly is an insect, belonging to the arthropod group.

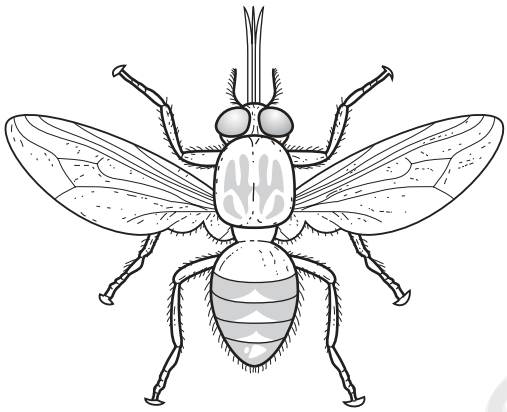

Fig. 4.2

(i) State **one** feature, **visible in Fig. 4.2**, which is common to all arthropods.

..... [1]

(ii) State two features, **visible in Fig. 4.2**, which distinguish insects from other arthropod groups.

1. .....

2. ..... [2]

(e) Scientists have discovered that zebras with more horizontal stripes attract fewer tsetse flies.

(i) Suggest why the stripes on the head and neck of the zebra would be an advantage when it feeds on grass on the ground.

.....

..... [2]

(ii) Describe how a species of zebra could gradually develop more horizontal stripes.

.....

.....

.....

..... [3]

[Total: 14]

© UCLES 2008
Downloaded from eduresourceza.com

Downloaded from eduresourceza.com

For Examiner's Use

5 To stay healthy we need a balanced diet.

(a) Define the term *balanced diet*.

.....

.....

..... [2]

Protein is one nutrient present in a balanced diet. The body cannot store protein, so any excess amino acids are broken down in the process of deamination, as shown in Fig. 5.1.

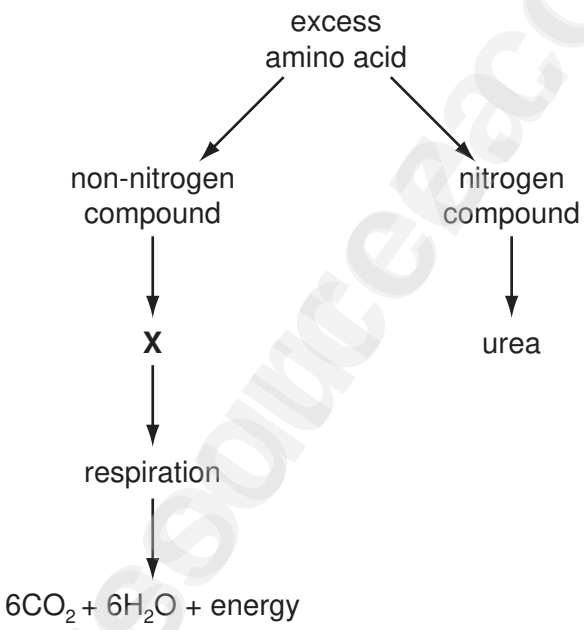

Fig. 5.1

(b) **(i)** Name the organ where deamination takes place.

..... [1]

(ii) Compound **X** is used as an energy source in respiration.

Suggest the name of compound **X**.

..... [1]

Downloaded from eduresourceza.com

Downloaded from eduresourceza.com

For Examiner's Use

(iii) State the type of respiration shown in Fig. 5.1.

Explain your answer.

type of respiration .....

explanation .....

..... [2]

(c) The urea produced is transported to the kidney, where it is excreted.

Describe how urea is transported in the blood to the kidney.

.....

..... [2]

Fig. 5.2 shows a kidney tubule (nephron) and its associated blood vessels.

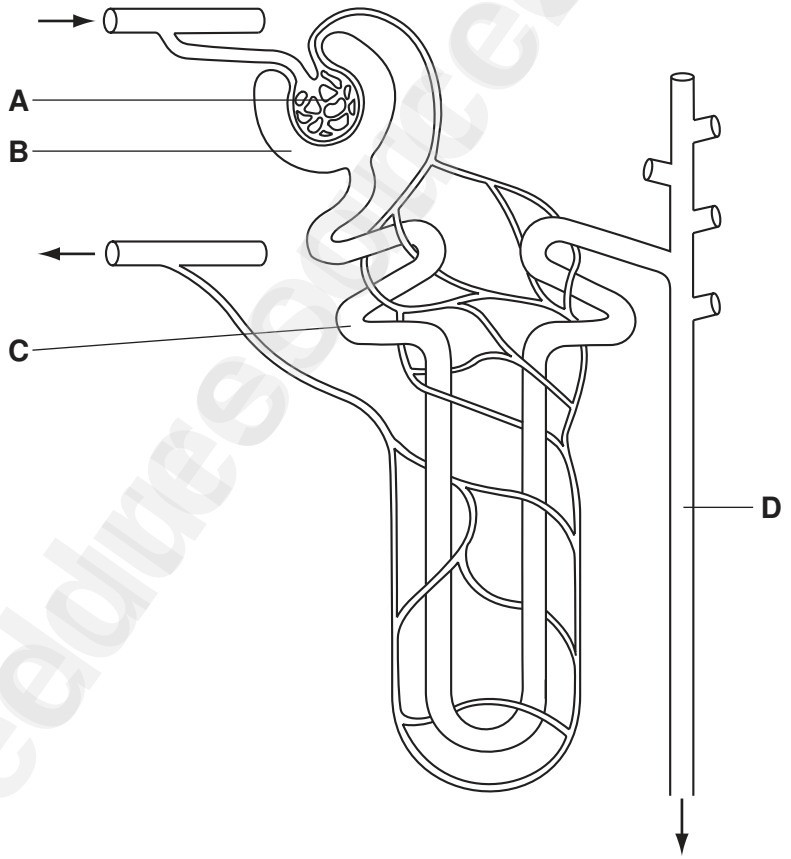

Fig. 5.2

© UCLES 2008
Downloaded from eduresourceza.com

Downloaded from eduresourceza.com

For Examiner's Use

(d) Complete the table by naming the parts labelled **A** to **D** and stating **one** function for each.

	name of part	function
A	.....	....
B	.....	....
C	.....	....
D	.....	....

[8]

(e) The volume of blood filtered by the kidneys is 1.18 dm^3 min^{-1}.

(i) Calculate the total volume of blood filtered in 24 hours.

Show your working.

volume = ... [2]

(ii) If the total volume of urine produced in 24 hours is 1.7 dm^3, calculate the percentage volume of the filtered blood excreted as urine in 24 hours.

Show your working.

% volume = ... [2]

[Total: 20]

© UCLES 2008
Downloaded from eduresourceza.com

Downloaded from eduresourceza.com

BLANK PAGE

eduresourceza.com

Downloaded from eduresourceza.com

Downloaded from eduresourceza.com

BLANK PAGE

eduresourceza.com

Downloaded from eduresourceza.com

Downloaded from eduresourceza.com

BLANK PAGE

Permission to reproduce items where third-party owned material protected by copyright is included has been sought and cleared where possible. Every reasonable effort has been made by the publisher (UCLES) to trace copyright holders, but if any items requiring clearance have unwittingly been included, the publisher will be pleased to make amends at the earliest possible opportunity.

University of Cambridge International Examinations is part of the Cambridge Assessment Group. Cambridge Assessment is the brand name of University of Cambridge Local Examinations Syndicate (UCLES), which is itself a department of the University of Cambridge.
Downloaded from eduresourceza.com

Dow Second Variant Question Paper za.com

UNIVERSITY OF CAMBRIDGE INTERNATIONAL EXAMINATIONS
International General Certificate of Secondary Education

CANDIDATE NAME

CENTRE NUMBER

CANDIDATE NUMBER

* 2 3 7 3 7 0 7 4 0 8 *

BIOLOGY **0610/32**

Paper 3 Extended **May/June 2008**

1 hour 15 minutes

Candidates answer on the Question Paper.

No Additional Materials are required.

READ THESE INSTRUCTIONS FIRST

Write your Centre number, Candidate number and name on all the work you hand in.
Write in dark blue or black pen.
You may use a pencil for any diagrams or graphs.
Do not use staples, paper clips, highlighters, glue or correction fluid.
DO **NOT** WRITE IN ANY BARCODES.

Answer **all** questions.
At the end of the examination, fasten all your work securely together.
The number of marks is given in brackets [ ] at the end of each question or part question.

For Examiner's Use	
1	
2	
3	
4	
5	
Total	

This document consists of **13** printed pages and **3** blank pages.

© UCLES 2008

UNIVERSITY of CAMBRIDGE International Examinations

Downloaded from edurescourceza.com

Downloaded from eduresourceza.com

For Examiner's Use

1 **(a)** Using straight lines, match the names of the flower parts with their functions. One has been completed for you.

anther	allows the passage of the pollen tube to the ovary
petal	attracts insects for pollination
sepal	produces pollen grains
style	protects the flower when in bud
stigma	the surface on which the pollen lands during pollination

[4]

(b) Describe how the stigmas of wind-pollinated flowers differ from the stigmas of insect-pollinated flowers. Relate these differences to the use of wind as the pollinating agent.

.....

.....

.....

.....

..... [3]

(c) Discuss the implications to a species of self-pollination.

.....

.....

.....

..... [3]

[Total: 10]

© UCLES 2008
Downloaded from eduresourceza.com

Downloaded from eduresourceza.com

For Examiner's Use

2 Fig. 2.1 shows *Salvinia molesta*, which is an Australian freshwater plant, introduced to the wetlands of Namibia as a source of animal food. However, in Namibia the plant reproduces much more quickly than in Australia. It quickly covers the surface of the water.

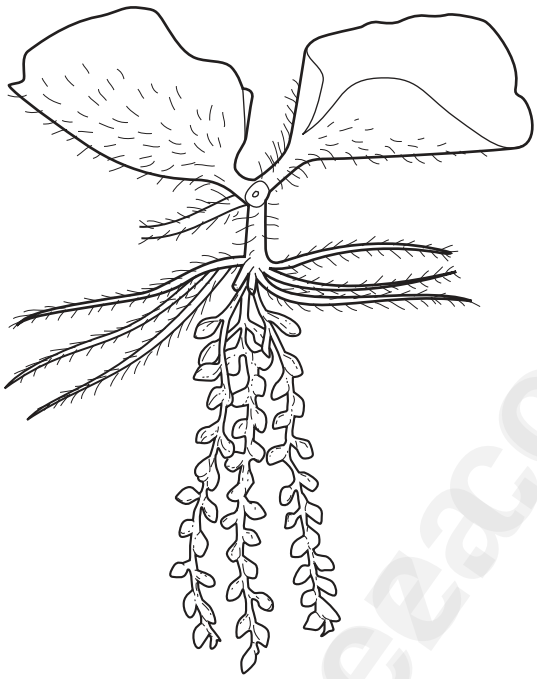

Fig. 2.1

(a) Scientists are concerned about the environmental damage caused by *S. molesta* to the aquatic habitats in the ecosystem of the Namibian wetlands.

(i) Define the term *ecosystem*.

.....

..... [2]

(ii) Outline how *S. molesta* could damage the aquatic habitats of the wetland ecosystem.

.....

.....

.....

.....

.....

.....

..... [4]

Downloaded from eduresourceza.com

Downloaded from eduresourceza.com

For Examiner's Use

(b) *S. molesta* is being controlled using an Australian beetle, *Cyrtobagous saliniae.* The beetle eats the growing points of the plant.

Suggest and explain why

(i) it is better to use a natural consumer of the plant than to apply herbicides in the water to kill it,

.....

.....

..... [2]

(ii) it could be dangerous to the wetland ecosystem to introduce Australian beetles.

.....

.....

..... [2]

(c) The growth of *S. molesta* is now under control.

Its population growth has followed the pattern of a sigmoid curve.

(i) Using the axes below, sketch a sigmoid growth curve for *S. molesta*. [1]

(ii) Label the phases of the sigmoid growth curve. [3]

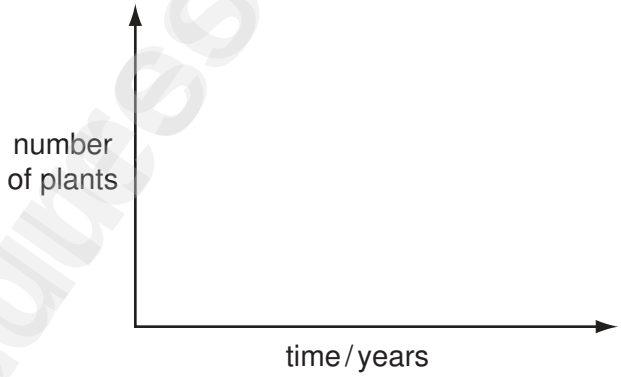

(iii) Using the information given in this question (pages 3 and 4), state **one** factor that is limiting the growth of *S. molesta*.

..... [1]

© UCLES 2008
Downloaded from eduresourceza.com

Downloaded from eduresourceza.com

For Examiner's Use

(iv) Explain how two other named factors could also limit the growth of *S. molesta*.

1. .....

.....

.....

2. .....

.....

..... [4]

[Total: 19]

3 Catalase is an enzyme found in plant and animal cells. It has the function of breaking down hydrogen peroxide, a toxic waste product of metabolic processes.

(a) (i) State the term used to describe the removal of waste products of metabolism.

..... [1]

(ii) Define the term *enzyme*.

.....

..... [2]

An investigation was carried out to study the effect of pH on catalase, using pieces of potato as a source of the enzyme.

Oxygen is formed when catalase breaks down hydrogen peroxide, as shown in the equation.

$$\text{hydrogen peroxide} \xrightarrow{\text{catalase}} \text{water} + \text{oxygen}$$

The rate of reaction can be found by measuring how long it takes for 10 cm^3 oxygen to be collected.

(b) (i) State the independent (input) variable in this investigation.

..... [1]

(ii) Suggest two factors that would need to be kept constant in this investigation.

1. .....

2. ..... [2]

Downloaded from eduresourceza.com

Downloaded from eduresourceza.com

For Examiner's Use

Table 3.1 shows the results of the investigation, but it is incomplete.

Table 3.1

pH	time to collect 10 cm^3 oxygen / min	rate of oxygen production / cm^3 min^{-1}
4	20.0	0.50
5	12.5	0.80
6	10.0	1.00
7	13.6	0.74
8	17.4	

(c) Calculate the rate of oxygen production at **pH 8**.

Show your working. Write your answer in Table 3.1.

[2]

© UCLES 2008
Downloaded from eduresourceza.com

Downloaded from eduresourceza.com

For Examiner's Use

(d) Complete the line graph by plotting the rate of oxygen production against pH.

[4]

(e) **(i)** Using data from the graph, describe the changes in the reaction rate between **pH 4** and **pH 8**.

.....

.....

..... [2]

(ii) Explain the change in the reaction rate between **pH 6** and **pH 8**.

.....

.....

.....

..... [3]

[Total: 17]

Downloaded from eduresourceza.com

Downloaded from eduresourceza.com

For Examiner's Use

4 Fig. 4.1 shows three species of zebra.

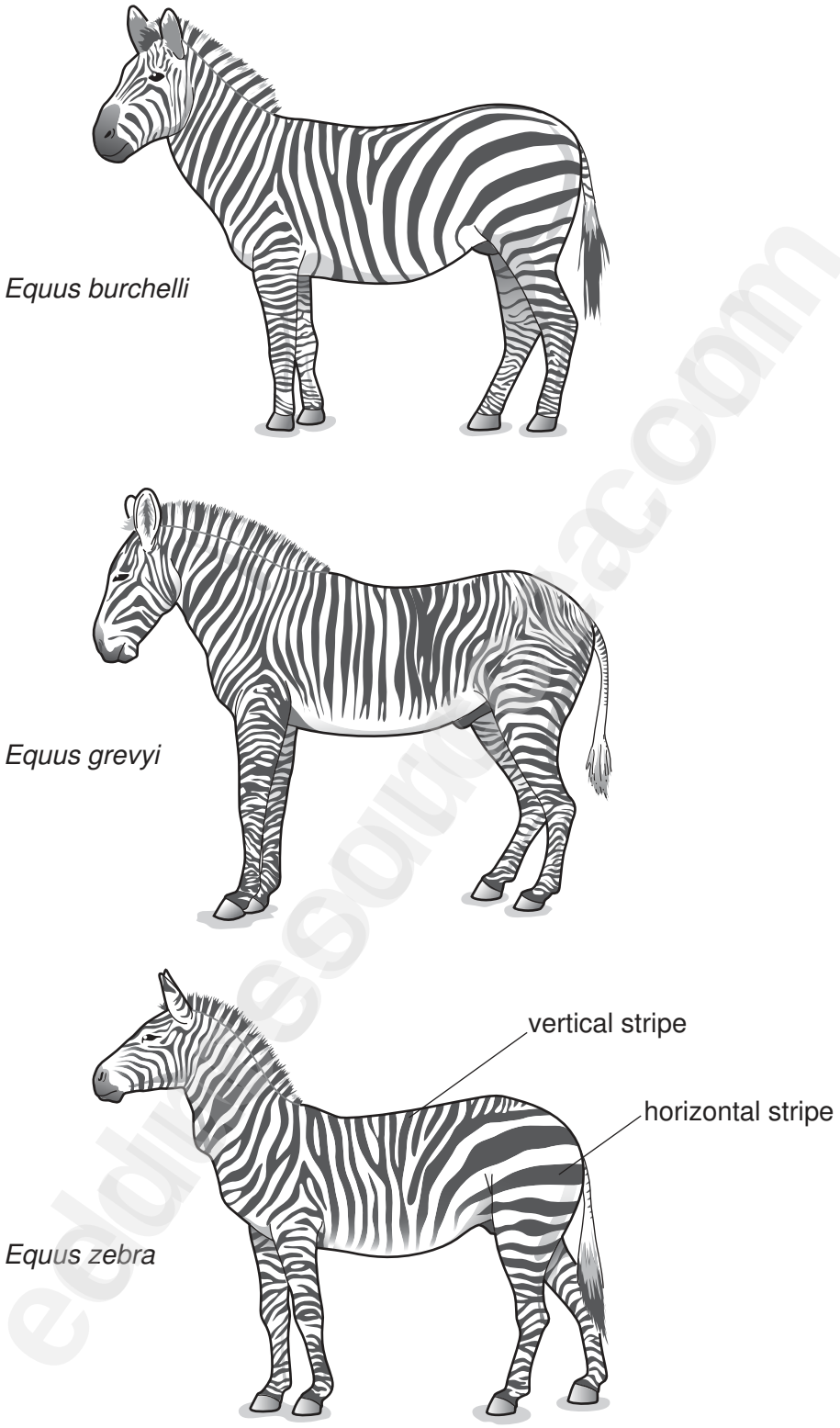

Fig. 4.1

Downloaded from eduresourceza.com

Downloaded from eduresourceza.com

For Examiner's Use

(a) Describe **one** method a scientist could use to show that the zebras shown in Fig. 4.1 are different species.

.....

..... [1]

(b) Studies have shown that the hotter the environment, the more stripes zebras have.

(i) State the type of variation which would result in different numbers of stripes.

..... [1]

(ii) Study Fig. 4.1. Suggest which species of zebra lives in the hottest environment.

..... [1]

(c) Occasionally, zebras are born that are almost completely black. The change in appearance is the result of mutation.

(i) State the term that is used to describe the appearance of an organism.

..... [1]

(ii) Define the term *mutation*.

.....

..... [2]

Downloaded from eduresourceza.com

Downloaded from eduresourceza.com

For Examiner's Use

(d) Tsetse flies attack animals with short fur, sucking their blood and spreading diseases.

Fig. 4.2 shows a tsetse fly. This fly is an insect, belonging to the arthropod group.

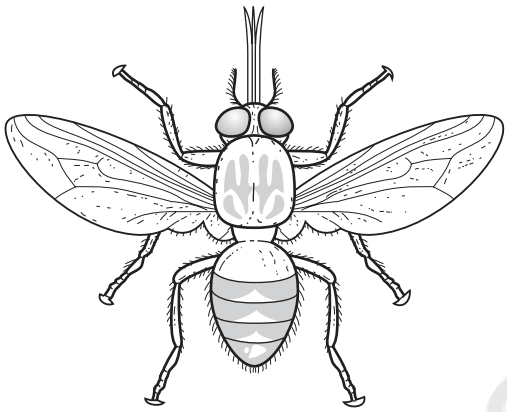

Fig. 4.2

(i) State **one** feature, **visible in Fig. 4.2**, which is common to all arthropods.

..... [1]

(ii) State two features, **visible in Fig. 4.2**, which distinguish insects from other arthropod groups.

1. .....

2. ..... [2]

(e) Scientists have discovered that zebras with more horizontal stripes attract fewer tsetse flies.

(i) Suggest why the stripes on the head and neck of the zebra would be an advantage when it feeds on grass on the ground.

.....

..... [2]

(ii) Describe how a species of zebra could gradually develop more horizontal stripes.

.....

.....

.....

..... [3]

[Total: 14]

© UCLES 2008
Downloaded from eduresourceza.com

Downloaded from eduresourceza.com

For Examiner's Use

5 To stay healthy we need a balanced diet.

(a) Define the term *balanced diet*.

.....

.....

..... [2]

Protein is one nutrient present in a balanced diet. The body cannot store protein, so any excess amino acids are broken down in the process of deamination, as shown in Fig. 5.1.

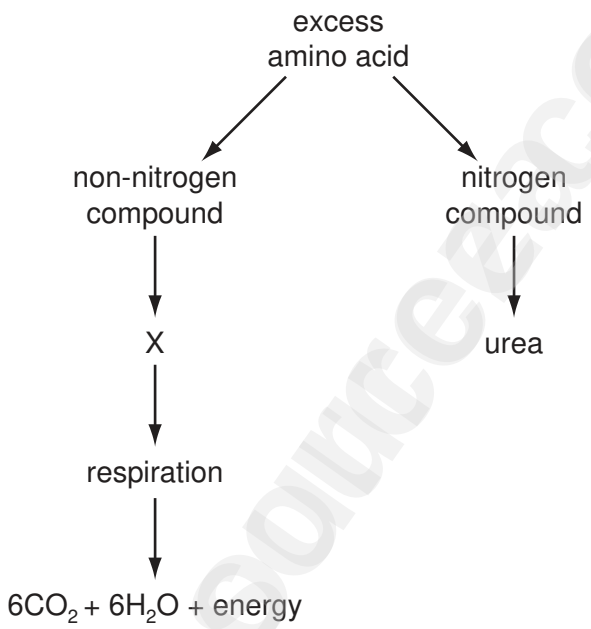

Fig. 5.1

(b) **(i)** Name the organ where deamination takes place.

..... [1]

(ii) Compound **X** is used as an energy source in respiration.

Suggest the name of compound **X**.

..... [1]

Downloaded from eduresourceza.com

Downloaded from eduresourceza.com

For Examiner's Use

(iii) State the type of respiration shown in Fig. 5.1.

Explain your answer.

type of respiration .....

explanation .....

..... [2]

(c) The urea produced is transported to the kidney, where it is excreted.

Describe how urea is transported in the blood to the kidney.

.....

..... [2]

Fig. 5.2 shows a kidney tubule (nephron) and its associated blood vessels.

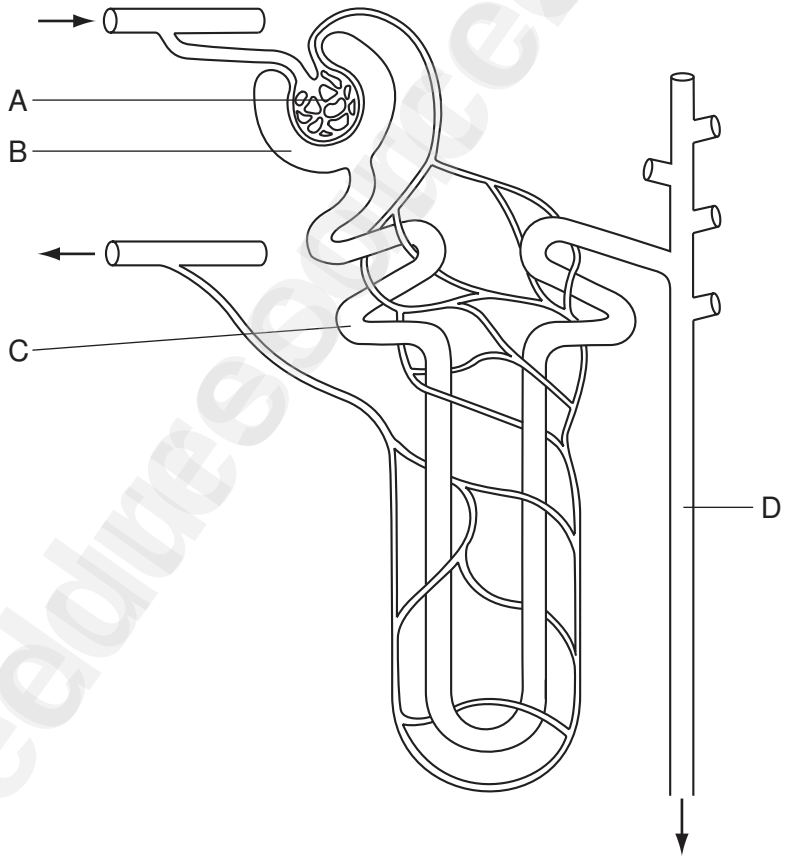

Fig. 5.2

Downloaded from eduresourceza.com

Downloaded from eduresourceza.com

For Examiner's Use

(d) Complete the table by naming the parts labelled **A** to **D** and stating **one** function for each.

	name of part	function
A	.....	....
B	.....	....
C	.....	....
D	.....	....

[8]

(e) The volume of blood filtered by the kidneys is 1.18 dm^3 min^{-1}.

(i) Calculate the total volume of blood filtered in 24 hours.

Show your working.

volume = ... [2]

(ii) If the total volume of urine produced in 24 hours is 1.7 dm^3, calculate the percentage volume of the filtered blood excreted as urine in 24 hours.

Show your working.

% volume = ... [2]

[Total: 20]

© UCLES 2008
Downloaded from eduresourceza.com

Downloaded from eduresourceza.com

BLANK PAGE

eduresourceza.com

Downloaded from eduresourceza.com

Downloaded from eduresourceza.com

BLANK PAGE

eduresourceza.com

Downloaded from eduresourceza.com

Downloaded from eduresourceza.com

BLANK PAGE

Permission to reproduce items where third-party owned material protected by copyright is included has been sought and cleared where possible. Every reasonable effort has been made by the publisher (UCLES) to trace copyright holders, but if any items requiring clearance have unwittingly been included, the publisher will be pleased to make amends at the earliest possible opportunity.

University of Cambridge International Examinations is part of the Cambridge Assessment Group. Cambridge Assessment is the brand name of University of Cambridge Local Examinations Syndicate (UCLES), which is itself a department of the University of Cambridge.
Downloaded from eduresourceza.com