eduresourceza.com

Downloaded from eduresourceza.com

PHYSICS

Paper 9702/12
Multiple Choice

Question Number	*Key*	*Question Number*	*Key*
1	**D**	21	**B**
2	**C**	22	**B**
3	**C**	23	**C**
4	**B**	24	**C**
5	**D**	25	**D**
6	**D**	26	**B**
7	**C**	27	**D**
8	**D**	28	**C**
9	**A**	29	**D**
10	**A**	30	**B**
11	**A**	31	**A**
12	**D**	32	**D**
13	**C**	33	**C**
14	**C**	34	**B**
15	**D**	35	**C**
16	**A**	36	**C**
17	**B**	37	**D**
18	**B**	38	**A**
19	**B**	39	**B**
20	**C**	40	**B**

General comments

Candidates should always read each question through in its entirety before looking at the answer options, taking particular care when, for instance, a question asks 'Which statement is **not** correct?'. All four answer options should be considered carefully, trying to justify eliminating three of the options as a check to make sure the answer selected is the correct one.

When answering numerical questions, it is a good idea to try to calculate the answer before looking at the answer options. Candidates also need to ensure that the units used in a calculation are consistent, particularly if the information includes prefixes such as k, μ or M, or data which includes areas in mm^2 or cm^2 or volumes in mm^3 or cm^3.

Candidates found **Questions 1**, **8**, **13**, **20**, **23** and **28** particularly challenging, but answered **Questions 3**, **14**, **17**, **19**, **27** and **30** well.

Downloaded from eduresourceza.com

© 2021

Downloaded from eduresourceza.com

Comments on specific questions

Question 1

Candidates found this question challenging, with as many selecting options **A** or **C** as the correct answer, **D**.

A simple approach to the question is to recall that the density of water is 10^3 kg m^{-3} (1 g cm^{-3}) and, as sand sinks in water, the density of sand is larger than the density of water (but of the same order). Option **A** is 200 times the density of water and option **C** is $\frac{1}{50\text{th}}$ of the density of water, so both these answers can be rejected.

Question 8

Many candidates thought that the average resultant force acting on the ball was zero, perhaps arguing that the magnitude of the momentum of the ball does not change, so the resultant force is zero. The vertical component of the momentum changes from $+p \sin\theta$ to $-p \sin\theta$, a change of $2p \sin\theta$, so the rate of change of momentum is $\frac{2p \sin\theta}{t}$ (option **D**).

Question 9

Few candidates answered this question correctly, with more selecting option **C** rather than the correct option, **A**. Immediately after opening his parachute, a skydiver experiences an upward force, due to air resistance acting on the parachute, which is greater than the downward force of his weight, so he decelerates, i.e. his velocity decreases, but the direction of the velocity is still downwards.

Question 11

Only stronger candidates answered this question correctly. The key to this question was recognising that the direction of an electric field is the direction of the force that would act on a positively charged particle in the field. The electrical force on the particle must act upwards to balance the downward gravitational force on the particle (its weight). This could be due to a positively charged particle in an electric field acting upwards or a negatively charged particle in an electric field acting downwards (option **A**).

Question 13

Many candidates selected option **B** (calculating '$mg \sin\theta$ to find F) rather than the correct option, **C** ('$mg \tan\theta$). The question can be answered in a number of ways, e.g. by resolving forces horizontally and vertically and solving the simultaneous equations, or by drawing a force triangle:

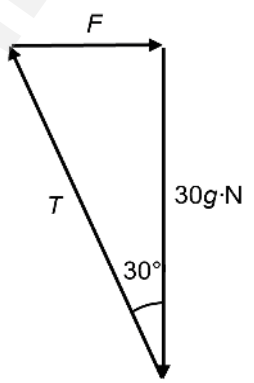

$$\frac{F}{30g} = \tan 30 \Rightarrow F = 30g \tan 30 = 170\,\text{N}$$

Downloaded from eduresourceza.com

© 2021

Downloaded from eduresourceza.com

Question 18

Stronger candidates answered this question correctly. The aircraft is travelling at constant speed, so the thrust force is equal to the drag force, 2400 N.

Using $P = Fv$, the power produced is $2400 \times 90 = 2.2 \times 10^5$ W (option **B**). Some candidates instead calculated the weight of the aircraft ($mg = 2000 \times 9.81 = 2.0 \times 10^4$ N) and multiplied this by the velocity ($2.0 \times 10^4 \times 90 = 1.8 \times 10^6$ W – option **C**).

Question 20

Candidates found this question quite challenging, with as many candidates selecting options **A** or **B** as the correct option, **C**. The area under the graph is only $\frac{1}{2}Fx$ if the graph is a straight line. The area under the graph could be the elastic potential energy stored in the stretched sample but only if the wire has stretched elastically. Only option **C**, the area under the graph is the work done in stretching the wire, must be correct.

Question 23

As many candidates selected option **D** as the correct option, **C**. The key to this question was recognising that the reflector must also be a node of the stationary wave as well as the four points detected by the microphone.

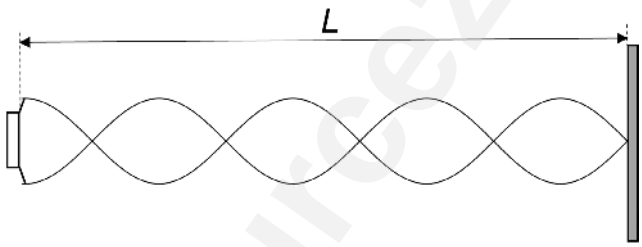

$$L = \frac{9}{4}\lambda \Rightarrow \lambda = \frac{4L}{9}$$

Question 24

This question was answered well by most candidates, but some selected option **B** rather than the correct option, **C**. Recalling the Doppler effect, the source of sound Z is emitting sound waves of frequency F and is travelling towards the observer at X, so observer X hears a sound of frequency greater than F. The source of sound is travelling away from Y, so observer Y hears a frequency less than F.

Question 26

Only stronger candidates answered this question correctly, with option **C** often chosen by other candidates. Assume the amplitude of X is greater than the amplitude of Y. When the two waves meet in phase:

amplitude of X + amplitude of Y = 14.0 cm

When two waves meet 180° out of phase:

amplitude of X – amplitude of Y = 4.0 cm

Solving these two equations, the amplitude of X = 9.0 cm and the amplitude of Y = 5.0 cm, so **B** is the correct answer.

Question 28

More candidates selected option **B** rather than the correct option, **C**. The two sources of microwaves emit waves which are 180° out of phase with each other (i.e. in 'antiphase'). If the path difference (QS–PS) is a whole number of wavelengths, the two waves arriving from P and Q would still be 180° out of phase so

Downloaded from eduresourceza.com

© 2021

Downloaded from eduresourceza.com

would interfere destructively, producing a minimum at S. If the path difference is an odd number of half-wavelengths, the two waves would arrive at S in phase and so produce a maximum signal.

Question 29

Stronger candidates answered this question correctly, with option **A** chosen by many other candidates. For the red light, the angle of the first-order maximum is given by:

$$\theta_R = \sin^{-1}\left(\frac{R}{s_R}\right)$$

Similarly, for the blue light:

$$\theta_B = \sin^{-1}\left(\frac{B}{s_B}\right)$$

Since these angles are the same:

$$\frac{R}{s_R} = \left(\frac{B}{s_B}\right)$$

hence: $\frac{\text{lines/mm}_B}{\text{lines/mm}_R} = \frac{s_R}{s_B} = \frac{R}{B} = \frac{633}{445} \rightarrow \text{lines/mm}_B = \frac{633}{445} \times 600 = 850\,\text{mm}^{-1}$ (Answer **D**)

Question 34

Many candidates answered this question correctly, but other candidates chose either option **A** or **C**.

The current in the diode is 40 mA, so from the graph the p.d. across the diode must be approximately 1.2 V. As the emf of the battery is 6.0 V (and the battery has negligible internal resistance) the p.d across the fixed resistor is 6.0 – 1.2 = 4.8 V. The resistance *R* of the fixed resistor is therefore:

$$R = \frac{V}{I} = \frac{4.8}{40 \times 10^{-3}} = 120$$

Question 35

As many candidates selected option **D** as the correct answer **C**. It is likely that these candidates found the resistance for one strand of the copper wire rather than seven strands in parallel. The resistance of one metre of a single wire is given by:

$$R = \frac{\rho L}{A} = \frac{1.72 \times 10^{-8} \times 1.0}{\pi \times \left(0.15 \times 10^{-3}\right)^2} = 0.243$$

The resistance of one metre of seven strands in parallel is therefore $\frac{0.243}{7} = 3.47 \times 10^{-2}$ and the p.d. between two points one metre apart is $13 \times 3.47 \times 10^{-2} = 0.45$ V.

Downloaded from eduresourceza.com

© 2021

Downloaded from eduresourceza.com

Question 36

Only the strongest candidates answered this question correctly, and option **B** was a popular choice. With the switch S open, the voltmeter in the circuit simply records the emf of the cell (1.5 V). When switch S is closed, let the current be I and the internal resistance of the cell be r:

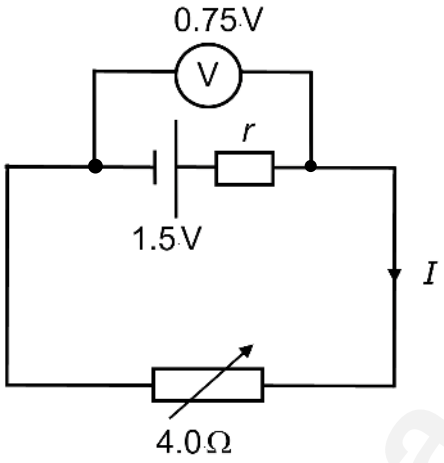

From the circuit:

$$1.5 = I(4.0 + r)$$

and

$$1.5 - Ir = 0.75$$

solving these equations for r: $r = 4.0\ \Omega$.

Question 37

Only stronger candidates answered this question correctly, with option **B** proving a common answer. It can sometimes help candidates if they redraw the same circuit slightly differently:

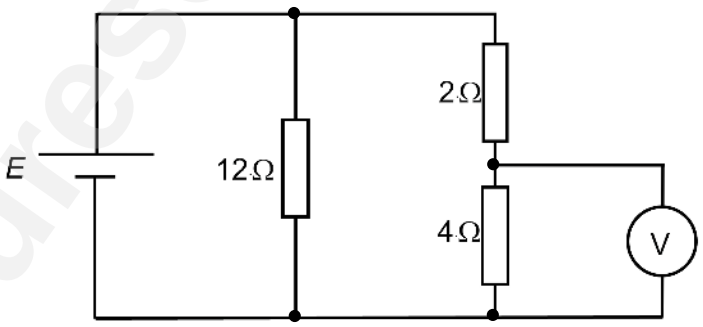

Drawing the circuit in this way, it becomes a more familiar 'potential divider' circuit. V_{out} is 2/3 of the potential difference across the 12 Ω resistor i.e.

$$V_{out} = \frac{2}{3}E \rightarrow \frac{V_{out}}{E} = \frac{2}{3}$$

Question 39

Many candidates selected option **A** rather than the correct answer **B**. Those candidates selecting answer **A** may have confused neutron number (which decreases by 2 in alpha decay) with nucleon number (which decreases by 4).

Downloaded from eduresourceza.com

© 2021

Downloaded from eduresourceza.com

PHYSICS

Paper 9702/22
AS Level Structured Questions

Key messages

- When candidates are asked to explain something, it is important that they explicitly give all the key points of the explanation and not merely imply any points.
- Candidates should be encouraged to present each step of a calculation clearly as it may be possible for credit for any correct working to be awarded even when the final answer is incorrect.
- When taking readings from a graph, candidates should pay attention to the units of graph scales in order to avoid possible power-of-ten errors.
- When stating definitions or the meaning of terms, candidates should be precise in their choice of words as the omission of a single key word can lead to an answer being incorrect.
- It is essential that candidates read all questions carefully.

General comments

There was a range of performance in this session but candidates did not appear to have difficulty in completing the paper in the allotted time.

Many of the questions were answered well but there were certain questions that most candidates found particularly challenging. Many could have improved their answers to **Question 3(c)(ii)** by having a greater understanding of how pressure difference causes upthrust. In **Question 6(b)(ii)** many candidates had difficulty applying Kirchhoff's second law to the circuit.

Comments on specific questions

Question 1

(a) Most candidates correctly identified acceleration as a vector. A significant number incorrectly stated that work was also a vector.

(b) (i) This question was usually answered correctly. Weaker candidates sometimes obtained an incorrect answer due to misreading the value of the velocity from the graph at either time $t = 0$ or at $t = 4.0$ s.

(ii) Although most candidates knew that the distance moved could be determined from the area under the graph, a significant minority calculated the area under the graph from a triangle rather than from the required trapezium. Candidates that used an equation of uniformly accelerated motion to determine the answer sometimes made the mistake of substituting an initial velocity of zero instead of $0.70\ \text{m s}^{-1}$.

(c) (i) Stronger candidates found it straightforward to give the general definition of force. However, some candidates inappropriately defined it in terms of the product of mass and acceleration which only applies to the specific case of an object with constant mass.

(ii) Candidates needed to understand that when the velocity-time graph has a constant gradient this is due to a constant resultant force acting on the object. Furthermore, the magnitude and sign of the gradient of the velocity-time graph determines the magnitude and sign of the force in the force-time graph. Some candidates incorrectly assumed that the magnitude of the force up to time $t = 4.0$ s

Downloaded from eduresourceza.com

© 2021

Downloaded from eduresourceza.com

was the same as that after t = 8.0 s. Weaker candidates often understood that there was zero resultant force from t = 4.0 to t = 8.0 s, but then made the mistake of sketching a changing force at other times. Candidates should be encouraged to use a ruler when drawing straight graph lines and to ensure that these lines can be clearly seen against the background graph grid.

Question 2

(a) Stronger candidates correctly stated work done in terms of the product of force and displacement in the direction of the force. When stating the meaning of work done in this way, it is important to refer to displacement or distance moved rather than just distance.

(b) (i) Most responses gained full credit.

(ii) The height was usually calculated correctly. The most common mistake was to assume that the ball had a constant acceleration.

(iii) Stronger candidates realised that the average resistive force on the ball could be determined by dividing the work done against air resistance by the height fallen. Some candidates did not know how to calculate the work done against the air resistance. Others calculated the average acceleration of the ball and then used this to find the average resultant force on the ball which they then mistook to be the average resistive force. The weakest candidates simply gave the weight of the ball as the final answer.

(c) Stronger candidates were able to give a clear and succinct explanation in a few lines of writing. Some candidates gave inappropriate responses that included either the instant when the ball was released or the period when it was finally moving with constant (terminal) velocity. This was unnecessary because the question instructed the candidates to consider only the time interval when the ball was moving downwards before reaching (terminal) velocity. Most candidates realised that the acceleration of the ball would decrease. However, candidates also needed to explicitly explain that this was due to increasing air resistance and therefore decreasing resultant force on the ball. Some candidates only implied the cause of the change in acceleration instead of giving an explicit explanation.

Question 3

(a) Most answers to this question were correct.

(b) (i) Most answers were correct, but sometimes candidates made a power-of-ten error by not converting the unit of extension from cm to m.

(ii) The strain energy was usually determined correctly. Some candidates made a power-of-ten error when reading the extension from the graph. The weakest candidates often thought that they were being asked to determine strain rather than strain energy.

(c) (i) Weaker candidates sometimes presented an inappropriate calculation that gave an answer corresponding to the mass of the cylinder rather than the upthrust acting on it.

(ii) Many candidates tried to determine a single pressure at the top of the cylinder or at the base of the cylinder. Some candidates incorrectly assumed that the pressure at the bottom of the cylinder could be calculated by dividing its weight by its base area.

(iii) Only stronger candidates could use the pressure difference between the two faces of the cylinder to calculate the density of the liquid. A small minority of candidates attempted to use Archimedes' principle, but a common mistake with that method was to confuse the upthrust on the cylinder with its weight.

(d) (i) This question was generally well answered.

(ii) Most answers to this question were correct.

Downloaded from eduresourceza.com

© 2021

Downloaded from eduresourceza.com

Question 4

(a) Instead of giving a general statement of the principle, some candidates inappropriately attempted to state the principle in the specific context of two waves forming a stationary wave. Another common mistake was to confuse displacement and amplitude.

(b) (i) The function of the metal plate as a reflector was often well known. The most common misconception was that the plate was there only to absorb the microwaves.

(ii) The wave equation was usually applied correctly, but some candidates expressed their calculated frequency in units of Hz instead of converting it into GHz as instructed. The weakest candidates sometimes attempted to use the speed of sound instead of the speed of light in their calculation.

(iii)1 Most candidates realised that the microwave receiver would be moved by a distance corresponding to half a wavelength. The most common incorrect response was a distance corresponding to one full wavelength.

(iii)2 Many candidates found this part of the question challenging and some appeared to guess the number of intensity maxima that would be detected or did not attempt a response.

Question 5

(a) Most candidates were able to apply the Doppler effect equation given on the Formulae Sheet. Some candidates overlooked the instruction to give their answer to three significant figures.

(b) Stronger candidates realised that the time interval could be calculated by determining the time taken for the source of sound to move along half the circumference of the circular path. However, mistakes were often made when calculating the length of half the circumference. Weaker candidates often tried to determine the difference between the minimum period and the maximum period of the sound heard by the observer.

Question 6

(a) A common mistake was to state the law in terms of a single current rather than in terms of the sum of the currents at a junction. Weaker candidates sometimes confused Kirchhoff's first law with Kirchhoff's second law.

(b) (i) A common misconception held by many candidates was that the resistance of the lamp was equal to the reciprocal of the gradient of the graph of current against potential difference. Other candidates incorrectly assumed that the potential difference across the lamp was equal to the electromotive force of the battery.

(ii) Most candidates found it difficult to apply Kirchhoff's laws in order to determine the internal resistance of the battery. A number of candidates simply divided the electromotive force of the battery by the current in the battery which gave the total resistance of the complete circuit and not the internal resistance of the battery. Another common error was to confuse the resistance of the lamp with the total external resistance of the circuit.

(iii) Most candidates gave the correct general symbol equation relating energy and power. However, a common mistake was to confuse the decrease in the energy stored in the battery with the final energy. Another common error was to assume that power was dissipated only by the external circuit and to ignore the power dissipated due to the internal resistance of the battery. Some of the weakest candidates did not attempt this question.

(iv) The appropriate symbol formula was usually stated correctly. Candidates needed to present their calculations carefully as poorly laid out calculations often led to mistakes when manipulating the algebra. The most common incorrect answer was equal to the reciprocal of the correct ratio.

Question 7

(a) (i) Candidates needed to give precise answers. Many simply stated some facts about the atom rather than a statement of what could be inferred from the specific result given in the question.

Downloaded from eduresourceza.com

© 2021

Downloaded from eduresourceza.com

(ii) Only a few candidates stated what could be inferred about how the mass is concentrated within the atom. Candidates were generally more successful in deducing that the atom has a nucleus that is charged.

(b) (i) Candidates had more success in determining the proton number than the nucleon number. A common mistake was to confuse the nucleon number with the number of neutrons.

(ii) This was answered well by stronger candidates but weaker candidates often just talked about beta decay or said that a neutron changes into a proton and did not answer the question by describing the change to the quark composition of the nucleon.

eduresourceza.com

Downloaded from eduresourceza.com

© 2021

Downloaded from eduresourceza.com

PHYSICS

Paper 9702/33
Advanced Practical Skills 1

Key messages

- A small diameter (e.g. that of a wire or a pin) can be found with good precision using a micrometer. Candidates should be reminded to be careful in deciding whether their value is reasonable and so an approximate measurement with for example, a ruler, can be useful. For example, if the candidate is using a screw-gauge micrometer and has to decide whether the reading for a pin diameter is 0.69 mm or 1.19 mm a ruler can quickly show whether the diameter is greater or less than one mm.

- Stronger candidates often round a calculated value to a sensible number of significant figures but in some cases it is not clear that they have done this. For example, the area of a circle of diameter 76 mm is 4418 mm^2. If the candidate rounds this to 2 significant figures and gives it as 4400 mm2 they need to make it clear that there was not a calculation error. This can be done by stating 'to 2 s.f.' or by giving their answer as 4.4 × 103 mm2.

General comments

There were many candidates who were well prepared for the practical paper and they demonstrated their skills in measuring, recording and processing their results. Nearly all candidates completed the two questions.

Most centres had no difficulty in providing the equipment needed. The values given in the Supervisor's Results enabled examiners to allow for any small changes to equipment when assessing candidates' work.

Comments on specific questions

Question 1

(a) Nearly all candidates recorded a value for C_0 in the expected range. Just a few candidates measured the whole spring length rather than just the coiled section, and a small number did not give their value to the nearest mm.

Nearly all candidates gave a sensible x value.

(b) The table usually contained six or more sets of values. In some cases the trend was wrong, possibly due to measuring x from the wrong end if the rod.

Many candidates used only part of the range of possible x values.

Tables were usually neat and clear. A few candidates missed out a heading unit or gave an incorrect unit, particularly for the $1 / E^4$ column.

The consistency of precision of x values was generally good, with just a few cases of extra trailing zeros.

The use of correct significant figures for calculated values varied. Some candidates kept the same number of decimal places in the column. This sometimes led to incorrect significant figures for one or more of the values.

Downloaded from eduresourceza.com

© 2021

Downloaded from eduresourceza.com

Calculation of 1 / E^4 was generally correct, with the power of ten indicated either in the heading or for each of the values in the body of the table. There were some cases of incorrect rounding.

(c) (i) There were many good graphs with sensible, well-labelled axes and accurately plotted points. In a few cases the power of ten changed part way along an axis, leading to a non-linear scale

(ii) Candidates often had difficulty choosing a best-fit line and they often showed the need for an obvious rotation.

(iii) Most candidates knew how to calculate the gradient and intercept of their line. There were sometimes errors in reading coordinates.

(d) Most candidates correctly transferred their values from **c(iii)**, with only a few candidates using values to just one significant figure.

The units for *a* and *b* were sometimes omitted or given to the wrong power.

Question 2

(a) The measurement of *L* and *D* was generally well done, but in a few cases the values were only given to the nearest cm.

(b) For those candidates using a micrometer screw gauge there was evidence that some had not had much practice in its use. Additional problems with conversion from mm to cm led to some unrealistic values.

Stronger candidates used an uncertainty of 0.001 cm when calculating the percentage uncertainty in *d* . This was appropriate for a direct measurement with a micrometer.

(c) The timing was usually carried out well with the unit added on the answer line.

Not all candidates recorded repeated timings followed by averaging.

(d) The second set of measurements using a larger hole was generally carried out well and nearly all data showed the correct trend.

(e) Most candidates calculated the two *k* values correctly. However, there was a few arithmetical errors or incorrect rearrangements of the expression.

Stronger candidates made a clear justification for the significant figures used for *k* by referring to the s.f. in both time and diameter values.

Many candidates were able to evaluate the percentage difference between the two *k* values and decided whether it was small enough to support the suggested relationship.

(f) The calculation involved careful combination of units as well as careful final rounding. Many candidates carried this out well.

(g) (i) This section required descriptions of difficulties found in carrying out the procedures, and limitations in the accuracy of readings. Although there were some very good answers, other candidates had difficulty in describing the limitations and linking them to a particular procedure or measurement.

Many candidates identified the problem of verifying a relationship with only two sets of test data.

The difficulty in keeping the base of the bottle 1 cm below the water surface was often listed but the cause (unwanted had movement) wasn't always mentioned.

There were many descriptions of the flimsy bottle changing shape during the measurement of its diameter.

Difficulty in seeing the water level clearly, or judging the moment when it passed the line, was often mentioned. To gain credit candidates had to link problem to the measurement of *t*.

Downloaded from eduresourceza.com

© 2021

Downloaded from eduresourceza.com

(ii) Many candidates answered this more clearly than **(i)**.

The idea of supporting or clamping the bottle to keep its position constant was suggested by many candidates.

In many cases credit was given for improvements in procedures. These included carrying out more tests with different hole sizes, using video recording with details of a timing method, and colouring the water to make the surface easier to see.

eduresourceza.com

Downloaded from eduresourceza.com

© 2021

Downloaded from eduresourceza.com

PHYSICS

Paper 9702/42
A Level Structured Questions

Key messages

Answers to numerical questions should be given to an appropriate number of significant figures. The precision of the data provided in the question is generally an indication of the appropriate number of significant figures for an answer.

Candidates need to be able to distinguish between related quantities with greater certainty. For example, there was confusion between gravitational potential and gravitational potential energy in **Question 1**. There was also confusion between magnetic flux density, magnetic flux and magnetic flux linkage in **Question 9**.

General comments

Candidates need to take care to ensure that they read the question properly, understand what is being asked and give responses that answer the question that is asked. Some candidates gave answers to questions that were not asked, but that have been asked in recent past papers. Candidates should be advised not to rely heavily on memorising previous mark schemes.

When there is a question where candidates are asked to show how to reach an answer, for example in **Question 4(b)(i)**, enough detail must be given so that each and every step in how to reach the expected numerical value is clear.

Candidates should be encouraged to think about how realistic their answers are. For example, in **Question 2(a)(i)** 0.33 cannot be a number of molecules.

Comments on specific questions

Question 1

(a) Some candidates knew what Newton's law of gravitation was, but omitted "product" when referring to the masses and used "radius" or an unqualified "distance" for the separation. Other candidates did not use the word "force" anywhere in their answer and were therefore unable to achieve any credit.

(b) Many candidates found this calculation challenging. There were able to read a point from the graph but then omitted the power of ten for the radius. Many candidates did not convert the time correctly and others did not convert the time value at all. A few candidates gave their answer to too few significant figures.

(c) (i) Many responses successfully made the point that the gravitational force is attractive, but most answered in terms of potential rather than potential energy. Only the strongest candidates made reference to work needing to be done on the rock in moving it from its orbit to infinity (or vice versa). A significant number of weaker candidates discussed work being done on the rock to keep it in orbit.

(ii) The starting point of equating gravitational force with the centripetal force was commonly used. Candidates were then able to use algebra correctly to gain the required expression for the kinetic energy.

Downloaded from eduresourceza.com

© 2021

Downloaded from eduresourceza.com

(iii) Many candidates correctly calculated the expression for the magnitude of the potential energy of the rock but then treated this as positive instead of negative. Other candidates attempted to add the expression of gravitational potential to the expression for kinetic energy.

Question 2

(a) (i) This was answered well, and only a small number of candidates gave an answer to too few significant figures. By far the most common mistake was by candidates who answered a different question from the one asked, and calculated the number of moles rather than the number of molecules.

(ii) Only the stronger candidates answered this question successfully. There was much confusion between the mass of the gas and the mass of a molecule, and also between r.m.s. speed and the mean square speed.

(b) As with **(a)(ii)**, many candidates calculated the value for the ratio of the mean square speeds but then omitted the square root to obtain the ratio of the r.m.s. values. Many candidates did not know the relationship between r.m.s. speed and absolute temperature.

Question 3

(a) This was generally answered well with many candidates awarded full credit

(b) This question proved challenging for many candidates who did not follow the instruction to discuss the spacing between molecules and instead gave answers in terms of forces, breaking bonds, or breaking down the ordering of particles. Some candidates referred to the spacing of molecules in solids, liquids and gases but did not compare the increase in these spacings at the two changes of state.

(c) (i) Most answers were correct here. Some candidates chose the end of the line on the graph, and some quoted the boiling point.

(ii) Many candidates were awarded credit for the correct starting equation, but most were unable to identify the correct time interval to use. Among the candidates who used the correct part of the graph, some did not use the x60 factor to convert from minutes to seconds and others did not covert from J to kJ.

(iii) Stronger candidates answered this well. Other candidates just referred to the slope of the graph or to values of latent heat instead of specific heat capacity.

Question 4

(a) This was generally answered well, but some candidates gave both of the properties of simple harmonic motion. The question explicitly required candidates to identify the one property of simple harmonic motion that is represented by the minus sign.

(b) (i) Many good answers were seen here, and candidates demonstrated different ways to show the required value. Responses based on calculating a force from the length of the spring, rather than its extension, were not accepted. Candidates needed to include enough detail to make their method clear in this question.

(ii) This was answered well with a few power of ten conversions missing.

(iii) Generally, this was answered correctly. The most common error was the use of an incorrect value for displacement where spring length or extensions were used instead in error.

(iv) This question was challenging for many candidates. Candidates who knew the time period did not change were unable to give enough explanation for this fact.

Question 5

(a) (i) This topic was not well known by candidates. The word “modulation” could not be used as this was part of what candidates were asked to explain.

Downloaded from eduresourceza.com

© 2021

Downloaded from eduresourceza.com

(ii) Weaker candidates gave advantages of various things that they had learnt through their course, mainly of digital v analogue transmission. Of those who addressed AM and FM, there were many good answers but also others which were too vague.

(b) (i) There were many correct answers here, but some responses used the speed of sound or thought the wavelength was 20 m (1510–1490).

(ii) Many candidates gave double the correct answer here of 20 kHz, (1510–1490) or just quoted 1510 kHz without understanding what the figure was showing them about the carrier wave and the audio signal.

(c) This part was more successfully answered than **(b)(ii)**.

Question 6

(a) A large number of candidates answered a different question from the one asked here, and discussed the field strengths rather than the field lines. Of those who did attempt to describe the field lines, many did describe them as radial but a number then contradicted this by describing them also as uniform or parallel.

(b) (i) This question was answered well.

(ii) Most candidates were able to use the graph to calculate the charge on the sphere. Others started with an equation without the radius being squared, or forgot to square the radius at the calculation stage.

(c) There were many correct answers here. Most candidates who did not gain full credit gained at least partial credit for quoting a correct formula.

Question 7

(a) (i) This question was answered well.

(ii) Most candidates answered this correctly.

(iii) This sketch graph proved challenging for many candidates. Most responses used the gain of 6.0 to draw a correct steeper, straight line, but then did not consider the saturation of the output of the amplifier at 3.0 V.

(iv) This question was answered well, but candidates needed to include where the ldr would be added to the circuit.

(b) (i) Many different components were named here, most of which were input rather than output devices. However, stronger candidates realised that the output of the op-amp had to be connected to a relay coil.

(ii) Only the strongest candidates produced successful diagrams. Common errors were the use of a resistor symbol rather than a relay coil symbol and adding connections between the two circuits.

Question 8

(a) (i) There were many correct arrows drawn here.

(ii) There were many correct answers, but weaker candidates found it difficult to determine the direction of the force correctly.

(iii) Most candidates thought the wire with the higher current would experience a greater force. Only a few candidates realised the two forces would be the same and most of those were able to explain why.

(b) (i) Most candidates did not seem to know the physics of NMRI scanning, and simply talked about radio waves being safer for the patient than X-ray scanning.

Downloaded from eduresourceza.com

© 2021

Downloaded from eduresourceza.com

(ii) Most candidates gave a learnt answer to a different question, and discussed detection of "reflected" radio waves, apparently unaware that the radio waves in NRMI scanning are not reflected.

Question 9

(a) Only stronger candidates answered this correctly. Most responses gave either a definition of magnetic flux or a definition of flux linkage in terms of magnetic flux, but rarely put the two together. Weaker candidates referred to the number of field lines, which was meaningless. There were also many candidates who attempted to define things like magnetic flux density or who stated Faraday's law of electromagnetic induction.

(b) A number of candidates thought that the e.m.f. is the area under the flux density – time graph. Stronger candidates were able to demonstrate the correct starting equation, but the majority did not use the steepest part of the graph to find the maximum magnitude of the induced e.m.f.

(c) (i) Many candidates gave "damping" as an answer but ignored the part of the question that specifically asked about the gradual reduction in amplitude and so missed the vital word "light" to qualify the damping.

(ii) There were some good attempts at answering this question, but only stronger candidates gained full credit. Many responses made no reference at all to induced e.m.f. or the current that exists in the sheets as a result. Candidates did not realise that the damping effect was due to the current that flows as a result of the induced e.m.f. A significant number of candidates thought the second sheet (Y) would cut the field more due to the cuts in the copper sheet and hence more e.m.f. would be induced in this sheet.

Question 10

(a) This question was usually answered correctly.

(b) This question was generally answered well.

(c) (i) This question was generally answered well.

(ii) There were many correct answers to this question, but some candidates just drew a sine wave indicating no rectification had taken place.

(iii) The capacitor was often drawn in the correct place in the circuit. However, some were in series and some were not in parallel with the resistor. Weaker candidates added other components such as diodes to the circuit instead.

Question 11

(a) (i) There was often confusion with the explanation for the intensity spikes in the emission spectrum, and many candidates gave explanations of the spikes rather than the continuous spectrum. Of those who answered the question as it was asked, a common misconception was that the electrons arrive at the target anode with different speeds / kinetic energies (despite the fact that they have all been accelerated through the same p.d.). Candidates were also unclear of the difference between the deceleration of the electrons on hitting the target and their acceleration through the applied potential difference.

(ii) This calculation was generally done well by those who identified the correct starting equation. Common errors included using the accelerating p.d. in place of the electron energy or finding the de Broglie wavelength of the electron rather than the wavelength of the emitted photon.

(b) (i) Many candidates were successful in achieving at least partial credit, and many achieved full credit. The most common error was an inaccurate read-off from the graph. Weaker candidates were often confused between I / I_o and ln (I / I_o).

(ii) Candidates who were successful in **(i)** were usually successful here as well. A few candidates used 95 per cent instead of 5 per cent. Some candidates did not take the natural log of 0.05.

Downloaded from eduresourceza.com

© 2021

Downloaded from eduresourceza.com

Question 12

(a) The meaning of "spontaneous" was often more clearly explained than the meaning of "random". Candidates should be reminded that they cannot make use of the word they are trying to define when giving a meaning. Some candidates knew that the randomness of decay is something to do with unpredictability, but were far too vague about what it is that is unpredictable to be credited.

(b) (i) Most candidates knew the relationship between decay constant, activity and number of undecayed nuclei, but many were unable to correctly determine the value of N. Some confused it with mass or number of moles. Stronger candidates knew that the value of N can be calculated from the mass of the sample, the mass number of strontium, and the Avogadro constant, but many forgot that the mass needed to be converted to grams.

(ii) The strongest candidates correctly identified that the decay product might be radioactive. Many weaker candidates were confused between the concepts of activity of a sample and measured count rate and made reference to background radiation and other sources of radiation in the room.

Downloaded from eduresourceza.com

© 2021

Downloaded from eduresourceza.com

PHYSICS

Paper 9702/52
Planning, Analysis and Evaluation

Key messages

- In **Question 1**, candidates' responses should include detailed explanations of experimental procedures such as how to control variables, how to take measurements and how to analyse the data.
- The numerical answers towards the end of **Question 2** require candidates to show all their working. A full understanding of significant figures and the treatment of uncertainties is required.
- The practical skills required for this paper should be developed and practised with a hands-on approach throughout the course. It is essential for candidates to have experienced practical work in preparation for answering this paper.

General comments

In **Question 1**, it is advisable that candidates should think carefully about the experiment following the points given on the question paper and to imagine how they would perform the experiment in the laboratory. Planning a few key points before answering **Question 1** is useful. Some candidates drew diagrams which did not have enough labels and often some important measurements were omitted. Many candidates were successful in the analysis section with clear identification of how the constant could be determined.

In **Question 2**, candidates should be familiar with completing a results table for quantities and their uncertainty, and with finding the gradient and *y*-intercept of a graph. For several candidates, credit was not awarded because the points were not plotted correctly, the line of best fit or worst acceptable line was not drawn correctly or coordinates were incorrectly read off. A significant number of candidates incorrectly read off the *y*-intercept from a false origin.

Candidates should be advised that mathematical working in the latter parts of the question requires a clear statement of the equation used with correct substitution of numbers, and the answer calculated including the correct power of ten. Candidates should set out their working in a logical and readable manner. Care should be taken when numbers are crossed out.

Comments on specific questions

Question 1

Most candidates correctly identified the independent and dependent variables. Candidates should then be encouraged to consider the control of variables and to explicitly state the quantities that need to be kept constant to make the experiment a fair test . In this case the radius r of the cylinder and the density σ of the oil needed to be kept constant. Several candidates use the incorrect term 'control' rather than stating that r and σ needed to be kept constant. Candidates should identify the variables to be controlled from the given relationship. Credit was given for keeping the temperature of the oil constant instead of the density. However, vague references to keeping temperature did not gain credit.

Candidates were awarded credit for a clearly labelled diagram. Diagrams should be drawn of the workable experiment. In this experiment, candidates needed to clearly show a beaker on a bench or supported in a clamp. Candidates were also expected to show the cylinder partially submerged in the oil. Both the cylinder and the oil needed to be labelled.

Downloaded from eduresourceza.com

© 2021

Downloaded from eduresourceza.com

Most candidates gained credit for suggesting using a top-pan balance to measure the mass of the cylinders. Credit was not awarded for 'mass scale' or 'scale'. Similarly, most candidates gained credit for using a stop-watch or timer to determine the period of the oscillations. It is expected that candidates should indicate the quantities that are measured and vague statements such as 'I will use a stop-watch to measure time' on their own did not gain credit. Similarly, a diagram of a stop-watch or a top pan balance did not gain credit without an explanation as to the quantity being measured. Credit for detail was available for the method of determining the period of the oscillations. Many candidates discussed measuring the time for ten oscillations and dividing by ten to determine the period. Candidates who suggested counting the number of oscillations in a fixed time period did not gain credit.

Most candidates gained credit for suggesting using callipers or a micrometer screw gauge to measure the diameter of the cylinders and then to divide the diameter by two to determine *r*. Stronger candidates suggested repeating the measurements of the diameter in different directions and then finding the mean. A number of candidates suggested callipers or a micrometer screw gauge to measure *r* directly. However, this is not good practice. Some candidates suggested using a ruler and this suggestion only gained credit if additional detail was given, e.g. using blocks to make sure the maximum distance was measured.

Many candidates suggested correct axes for a graph (often T^2 against *m*). A significant number of candidates incorrectly suggested plotting *T* against *m*. Candidates needed to explicitly state the quantities to be plotted on each axis either in the text or on drawn axes. Credit was not given for just writing $y = mx + c$ under an expression. Having suggested an appropriate graph, candidates needed to explain how the graph would confirm the suggested relationship. Candidates need to use the words 'relationship is valid if' and the word 'straight' to describe the line. For a T^2 against *m* graph candidates needed to state that the straight line went through the origin. Candidates who suggested plotting lg *T* against lg *m* needed to state that the straight line would have a gradient of 0.5.

Candidates needed to explain how they would determine a value of *K* from the experimental results. Some candidates correctly identified a relationship between *K* and the gradient but did not make *K* the subject of the equation. Some candidates suggested other graphs to plot such as x^2 against *h*. These could be given credit if the reasoning was correct and the equation for *K* was correct. Similarly, some candidates suggested plotting lg *T* against lg *M* and this could also gain credit if the gradient and intercept were correctly identified, and *K* was the subject of the expression in terms of the *y*-intercept.

To gain credit for additional detail candidates should be encouraged to write their plans including appropriate detail. Some candidates' answers suggested that they had not had sufficient practical experience. Vague responses were not credited. It is essential that candidates' answers are relevant to the experiment in question rather than general rules for working in the laboratory.

In this experiment, cooking oil was used. Credit could be awarded for describing either a method to prevent the oil contacting the skin or preventing slippery hands. Alternatively, credit was awarded for methods to avoid oil spillages. Stating 'wear goggles to prevent the oil entering the eyes' did not gain credit since it implied poor experimentation. Similarly, 'wiping up oil spills' was not sufficient since there should be a safety precaution rather than a reaction.

Credit was available for describing the method to determine the density of the oil in detail. Candidates needed to explain the measurement of the mass of the oil by subtracting the mass of an empty measuring cylinder from the mass of the measuring cylinder with the oil mass. Candidates also needed to state how the volume of the oil would be measured, e.g. measuring cylinder. Credit was not given for beaker (or calibrated beaker). The equation for density also needed to be given. Credit was not given for just quoting the equation. An experimental method to determine mass and volume was needed.

Some candidates suggested the use of a video camera. To gain credit, the position of the video camera needed to be shown in the diagram and an explanation of its use to determine the period was required, including stating that the video was played back frame by frame or in slow motion.

Additional credit for detail was also available for fiducial marks to assist in the counting of oscillations. It was expected that the fiducial mark would be shown on the diagram and an explanation given. Credit was not awarded for starting the oscillations from the same position. Some candidates sensibly stated that they would wait for the oscillations to become even or steady.

Downloaded from eduresourceza.com

© 2021

Downloaded from eduresourceza.com

Question 2

(a) Candidates who were mathematically confident were able to work through the algebra and achieve credit. Expressions should have been simplified. For example, for the y-intercept $\frac{A}{2uA}$, this should have been written as $\frac{1}{2u}$. Weaker candidates should be encouraged to use the space on the question paper to rearrange the equation into an equation of a straight line.

(b) Completing the table appeared to be straightforward for candidates. Most candidates were able to calculate values for $\frac{1}{v}$. However, sometimes candidates did not use an appropriate number of significant figures. Since values of t and L were recorded to two significant figures, values of $\frac{1}{v}$ should have been recorded to two (or three) significant figures. A common error was in the fifth row when the value for $\frac{1}{v}$ was written as '0.08' (one significant figure) rather than '0.080' (two significant figures).

Many candidates did not determine the absolute uncertainty in $\frac{1}{v}$ correctly. Candidates need to understand the rules for combining uncertainties, including the conversion from an absolute uncertainty to a percentage uncertainty and the conversion from a percentage uncertainty to an absolute uncertainty. For maximum/minimum methods, candidates either needed to use maximum t divided by minimum L or minimum t divided by maximum L.

(c) (i) The points and error bars were straightforward to plot. A significant number of candidates drew large blobs for the plotted points which could not be awarded credit. The diameter of each point should be less than half a small square. Candidates need to take greater care over the accuracy of the error bars and should ensure that the error bars are symmetrical.

(ii) Most candidates appeared to be using a sharp pencil and a transparent 30 cm ruler. The line of best fit did not pass through both the highest and lowest point for the data. The worst acceptable line was usually drawn well, and many stronger candidates drew a line which passed through all error bars. Candidates should clearly indicate the lines drawn. Where a dashed line is used to represent the worst acceptable line, the dashed parts of the line should cross the error bars.

(iii) Most candidates clearly demonstrated the points that they used to calculate the gradient. Some candidates misread coordinates or did not use a sensibly sized triangle. A small number of candidates chose data points that did not lie on the lines, often using data from the table that was close to the line instead. Candidates should be encouraged to select two points which are easy to read from the graph.

When determining the uncertainty in the gradient, candidates needed to show their working including the coordinates that they used from the worst acceptable line. In calculating the absolute uncertainty in the gradient, there must be evidence of subtraction between the gradient of the line of best fit and the gradient of the worst acceptable line.

(iv) The majority of the candidates who were awarded full credit set out their working clearly. Stronger candidates often substituted a data point from the gradient calculation **(iii)** into $y = mx + c$. A significant number of candidates read the value of $\frac{1}{v}$ from the y-axis when $m = 200$. This suggested that these candidates had not understood that there was a false origin.

Similarly, when determining the uncertainty in the y-intercept, candidates needed to show their working including both the gradient and a data point from the worst acceptable line. In calculating the absolute uncertainty, there must be evidence of subtraction between the y-intercept of the line of best fit and the y-intercept of the worst acceptable line. Credit was not awarded to candidates who just read a value from the y-axis for when $m = 200$.

Downloaded from eduresourceza.com

© 2021

Downloaded from eduresourceza.com

(d) (i) It was expected that candidates would clearly show the substitution of the gradient and *y*-intercept to determine values of *A* and *u*. Credit was not given for substituting data vales from the table into the expression. Candidates were also expected to give the values of *A* and *u* to an appropriate number of significant figures. Since the data for *t* and *L* was given to two significant figures and the data for *m* was given to three significant figures, the values for *A* and *u* should have been given to the same as the least significant data, i.e. two (or three) significant figures. Candidates were also required to include appropriate units with the correct power of ten. A number of candidates incorrectly wrote m s^{-1} instead of cm s^{-1}. Similarly, a number of candidates incorrectly included speed units for *A*.

(ii) Many candidates correctly added the percentage uncertainty in the gradient to the percentage uncertainty in the *y*-intercept. Other candidates correctly added the percentage uncertainty in the gradient to the percentage uncertainty in *u*. Credit was given if candidates clearly showed the method used to determine the uncertainty in *u*. Similarly, some candidates used maximum / minimum methods but credit could only be scored for these methods when clear working was shown.

(e) There were many ways that candidates could determine *m*. Candidates needed to show clear and logical working for this question. Clear substitution of numbers into equations was needed to determine *m*. Some candidates used the gradient and *y*-intercept, others substituted values for *A* and *u* from **d(i)**.

Downloaded from eduresourceza.com

© 2021